This is an uncontrolled copy and will not be kept up to date

| Rolls-Royce | ENGINEERING SPECIFICATION | RRES 90027 |
|---|---|---|
| | | Revision D |
| | | First Issued 21 Aug 09 |
| | | Revised 17 May 2016 |

# Torque Tightening of Unified Threaded Components

TABLE OF CONTENTS:


1 SCOPE: ..... 5

2 REASON FOR USE: ..... 5

3 APPLICABLE DOCUMENTS: ..... 5

3.1 U.S. Government Publications: ..... 5
3.2 SAE Publications: ..... 5
3.3 ISO Documents: ..... 6
3.4 SAE Industry Technologies Consortia (ITC) Documents, ..... 6
3.5 Rolls-Royce Documents: ..... 6
3.6 British Standards Institution (BSI) documents: ..... 7

4 DEFINITION OF TERMS: ..... 8

5 GENERAL: ..... 9

5.1 Compliance: ..... 9
5.2 Abnormalities: ..... 9
5.3 High Integrity Fasteners: ..... 10

6 ASSEMBLY REQUIREMENTS: ..... 10

6.1 General Assembly Requirements: ..... 10
6.2 Bolts or Studs and Self-Locking or Free-Running Nuts or Self-Locking Inserts (Inch Thread): ..... 12
6.3 Slotted or Castellated Type Nuts (Inch Thread): ..... 17
6.4 Shaft Nuts: ..... 19
6.5 Screws (Inch Thread): ..... 20
6.6 37º Flare Tube or Hose Fittings and Hose Coupling Nuts: ..... 22
6.7 37º Flare Tube and Hose Fittings in Housing Bosses or Bulkheads: ..... 24
6.8 Beam Seal Fluid Fittings: ..... 26
6.9 Tube and Hose Fittings, Unions and Blanking Plugs: ..... 28
6.10 60° Tube and Hose Union Nuts, Free Running and Self Locking: ..... 31
6.11 Electrical Connector Jam Nut Mounting: ..... 34

7 APPROVED TORQUE TOOLING: ..... 37

7.1 Torque Tool Types: ..... 37
7.2 Hand Tools (Listed in the order of preference). ..... 37


This Document Contains No Export Control Data

PROPRIETARY RIGHTS LEGEND: Information contained herein is the property of Rolls-Royce and may not be copied, or communicated to a third-party, or used, for any purpose other than that for which it is supplied without the express written consent of Rolls-Royce. © 2016 Rolls-Royce

Rolls-Royce Plc 30-Nov-16 HE-35-08 22424 Mathias Schuler

© Rolls-Royce Plc 2001

This document is the property of Rolls-Royce plc and may not be copied or communicated to a third party or used for any purpose other than for which it is supplied without express written authority of Rolls-Royce plc

This is an uncontrolled copy and will not be kept up to date



7.3 Power Torque Tools: ..... 40
7.4 Torque Tool Selection: ..... 41
7.5 Care and Handling: ..... 42
7.6 Torque Wrench Accessories and Drives: ..... 43

8 FASTENER TIGHTENING REQUIREMENTS: ..... 44

8.1 Torque Measurement: ..... 44
8.2 Torque Tolerance: ..... 44
8.3 Torque Wrench Use: ..... 44
8.4 Tightening Sequence and Stages: ..... 46
8.5 Use of Slave Bolts: ..... 50

9 QUALITY ASSURANCE (JOINT CONDITION): ..... 50

9.1 Joint Condition Inspection Methods: ..... 50
9.2 Fasteners Designated High Integrity: ..... 51

10 NOTES: ..... 52

APPENDIX A – ROLLS-ROYCE APPROVED POWER TORQUE TOOLS - FOR THE APPLICATION OF FINAL TIGHTENING TORQUES ..... 54

APPENDIX B – GAUGING OF SELF-LOCKING THREADS FOR RE-USE ..... 55

APPENDIX C - TORQUE TIGHTENING OF FASTENERS CLAMPING CORRUJOINT SEALS ..... 57

APPENDIX D – TORQUE TIGHTENING VALUES USING EXTENSIONS FOR UNION NUTS ..... 58

FIGURES:

FIGURE 1 – MINIMUM THREAD PROTRUSION ..... 10

FIGURE 2 – INSUFFICIENT THREADS ..... 10

FIGURE 3 – SELF-LOCKING AND FREE RUNNING NUTS ON BOLTS ..... 13

FIGURE 4 – SELF-LOCKING NUTS ON NUT END OF STUDS ..... 13

FIGURE 5 – SELF-LOCKING NUTS ON CAPTIVE BOLTS (DEE OR TEE HEAD) ..... 13

FIGURE 6 – BOLTS IN THREADED HOLES ..... 13

FIGURE 7 – BOLTS IN INSERTS AND SELF-LOCKING INSERTS ..... 13

FIGURE 8 – BOLTS IN SELF-LOCKING CAPTIVE NUTS ..... 13

FIGURE 9 – BOLTS IN SELF-LOCKING PLATE NUTS ..... 13

FIGURE 10 – BOLTS IN SELF-LOCKING CLIP NUTS ..... 14

FIGURE 11 – SELF-RETAINING BOLTS IN SELF-LOCKING NUTS ..... 14

FIGURE 12 – LUBRICATION SURFACES ..... 15

FIGURE 13 – CASTELLATED NUTS ..... 17

Rolls-Royce Plc
30-Nov-16
15:35:08
2135424
Matthias Schuller



© Rolls-Royce Plc 2001



This document is the property of Rolls-Royce plc and may not be copied or communicated to a third party or used for any purpose other than for which it is supplied without express written authority of Rolls-Royce plc

This is an uncontrolled copy and will not be kept up to date



FIGURE 14 – SHAFT NUTS ..... 19

FIGURE 15 – COMMON AEROSPACE SCREW HEAD TYPES ..... 20

FIGURE 16 – TUBE AND HOSE COUPLING NUT ..... 22

FIGURE 17 – TUBE AND HOSE COUPLING NUTS WITH RING-LOCK PORT FITTING ..... 22

FIGURE 18 – STRAIGHT SEALED BOSS CONNECTORS (NIPPLES) WITH O-RINGS IN HOUSING BOSSES ..... 24

FIGURE 19 – JAM NUTS USED TO POSITION/SEAL ELBOWS AND TEES IN HOUSING BOSSES ..... 24

FIGURE 20 – JAM NUTS USED TO POSITION/SEAL BULKHEAD FITTINGS ..... 24

FIGURE 21 – TUBE AND HOSE BEAM SEAL NUTS ..... 26

FIGURE 22 – TUBE AND HOSE BEAM SEAL NUTS USED IN CONJUNCTION WITH BEAM SEAL RING-LOCK PORT FITTING ..... 26

FIGURE 23 – UNION ..... 28

FIGURE 24 - BLANKING PLUG ..... 28

FIGURE 25 – UNION NUTS ..... 31

FIGURE 26 – SELF-LOCKING UNION NUTS ..... 31

FIGURE 27 – CONNECTOR RECEPTACLE, JAM NUT MOUNTING ..... 34

FIGURE 28 – ELECTRONIC TORQUE WRENCH EXAMPLE ..... 37

FIGURE 29 – DIAL TORQUE WRENCH EXAMPLE ..... 37

FIGURE 30 – RATCHETING HEAD CLICK OR BREAK TYPE TORQUE WRENCH EXAMPLE ..... 38

FIGURE 31 – FIXED HEAD CLICK OR BREAK TYPE TORQUE WRENCH EXAMPLE ..... 38

FIGURE 32 – VISIBLE MICROMETER ADJUSTABLE SETTING TORQUE WRENCH EXAMPLE ..... 39

FIGURE 33 – TORQUE LIMTING SCREWDRIVER EXAMPLE ..... 39

FIGURE 34 – DEFLECTING BEAM TORQUE WRENCH EXAMPLE ..... 39

FIGURE 35 – TORQUE WRENCH USE AND EXTENSIONS ..... 45

FIGURE 36 – TORQUE SEQUENCE FOR OBLONG COVERS ..... 47

FIGURE 37 – TORQUE SEQUENCE FOR CIRCULAR OR IRREGULAR SHAPED FLANGES ..... 48

FIGURE 38 – TORQUE SEQUENCE FOR SPLIT CASINGS ..... 50

FIGURE 39 – EXAMPLES OF ACCEPTABLE VISUAL TORQUE INSPECTION MARKS ..... 51

FIGURE C1 – CORRUJOINT SEAL ..... 57

Rolls Royce Plc
30-Nov-16
15:55:08
213424
Mathias Schuler



© Rolls-Royce Plc 2001



This document is the property of Rolls-Royce plc and may not be copied or communicated to a third party or used for any purpose other than for which it is supplied without express written authority of Rolls-Royce plc

This is an uncontrolled copy and will not be kept up to date



TABLES:

TABLE 1 – MINIMUM PREVAILING TORQUE FOR SELF-LOCKING FASTENERS ..... 11

TABLE 2 – EXAMINATION OF FASTENER CONDITION ..... 14

TABLE 3 – ASSEMBLY TORQUE VALUES FOR BOLTS AND SELF-LOCKING OR FREE RUNNING NUTS (INCH THREAD) ..... 16

TABLE 4 – ASSEMBLY TORQUE VALUES FOR SLOTTED OR CASTELLATED TYPE NUTS (INCH THREAD) ..... 18

TABLE 5 – STANDARD CLASS 1 ASSEMBLY TORQUES FOR UNJC AND UNJF THREADED SCREWS ..... 21

TABLE 6 – ASSEMBLY TORQUE REQUIREMENTS FOR 37º FLARE TUBE AND HOSE COUPLING NUTS ..... 23

TABLE 7 –TORQUE REQUIREMENTS FOR JAM NUTS USED FOR POSITIONING 37º FLARE TUBE AND HOSE FITTINGS IN HOUSING BOSSES OR BULKHEADS ..... 25

TABLE 8 – ASSEMBLY TORQUE VALUES DYNAMIC BEAM SEAL FITTINGS ..... 27

TABLE 9 - ASSEMBLY TORQUE REQUIREMENTS UNIONS AND BLANKING PLUGS ..... 29

TABLE 10 – ASSEMBLY TORQUE REQUIREMENTS FOR BLANKING PLUGS AND PLUGS ASSEMBLED INTO LIGHT ALLOYS ..... 30

TABLE 11 – PREVAILING TORQUE REQUIREMENTS FOR SELF-LOCKING UNION NUTS ..... 32

TABLE 12 – ASSEMBLY TORQUE REQUIREMENTS FOR UNION NUTS ..... 33

TABLE 13 – TORQUE REQUIREMENTS OF JAM NUT FOR MOUNTING OF MIL-DTL-38999 SERIES III AND SERIES IV CONNECTOR RECEPTACLES ..... 35

TABLE 14 – TORQUE REQUIREMENTS OF JAM NUT FOR MOUNTING OF ESC CONNECTOR RECEPTACLE ..... 36

TABLE 15 – TORQUE CONVERSION FACTORS ..... 42

TABLE 16 – MAXIMUM NUMBER OF FASTENERS IN GROUP ..... 49

TABLE A1 – SAMPLE LIST OF ROLLS-ROYCE POWER TORQUE TOOLS APPROVED FOR THE APPLICATION OF FINAL TIGHTENING TORQUES. ..... 54

TABLE B1 - TORQUE CHECK GAUGES ..... 55

TABLE B2 - ASSEMBLY TOOLS FOR HELICAL COIL INSERTS ..... 55

TABLE B3 - ENGINE TYPES AND THREAD APPLICATIONS ..... 56

TABLE D1 - TORQUE TIGHTENING VALUES FOR UNION NUTS ..... 58

Rolls Royce plc
30 Nov 16
15:35:08
213424
Mathias Schuler



© Rolls-Royce Plc 2001



This document is the property of Rolls-Royce plc and may not be copied or communicated to a third party or used for any purpose other than for which it is supplied without express written authority of Rolls-Royce plc

This is an uncontrolled copy and will not be kept up to date



1 SCOPE:

1.1 This specification identifies torque requirements for threaded fasteners, tube fittings, blanking plugs and electrical connectors, including specific torque values, tooling, assembly, tightening and inspection requirements.

2 REASON FOR USE:

2.1 The intent of this specification is to ensure consistent clamping force of threaded fasteners, mounting and mating of tube fittings and the mounting of electrical connectors.

3 APPLICABLE DOCUMENTS:

The following publications form a part of this document to the extent specified herein. The applicable issue shall be the current issue, unless a specific document issue is specified. When the referenced document has been cancelled and no superseding document has been specified, the last published issue of that document shall apply. Additionally, contact your sector's Rolls-Royce Technical Authority to obtain guidance/approval on action to remove or replace the cancelled reference by a drawing and/or specification change. In the event of a conflict between the text of this document and the references cited herein, the text of this document takes precedence.

3.1 U.S. Government Publications:

Available from DODSSP, Subscription Services Desk, Bldg. 4D, 700 Robbins, Ave., Philadelphia, PA 19111, or **www.dodssp.daps.mil**

| | |
|---|---|
| MIL-DTL-38999 | Connector, Electrical, Circular, Miniature, High Density, Quick Disconnect (Bayonet, Threaded, and Breech Coupling), Environment Resistant, Removable Crimp and Hermetic Solder Contacts, General Specification For |
| MIL-DTL-83723 | Connectors, Electrical, (Circular, Environment Resisting), Receptacles and Plugs, General Specification For |
| MIL-PRF-7808 | Lubricating Oil, Aircraft Turbine Engine, Synthetic Base |
| MIL-PRF-23699 | Lubricating Oil, Aircraft Turbine Engine, Synthetic Base, NATO Code Number O-156 |
| MS3186 | Connector, Mounting To Connectors, Mounting Nuts, Plain Hexagon |

3.2 SAE Publications:

Available from SAE, 400 Commonwealth Dr., Warrendale, PA 15096-0001, or **www.sae.org**

| | |
|---|---|
| ARP1755 | Effect of Cleaning Agents on Aircraft Engine Materials Stock Loss Test Method |
| AS3001 | Plug, Machine Thread - AMS 5646, Metal Gasket, Silver Plated, Reduced Diameter Thread |
| AS5780 | Specification for Aero and Aero-Derived Gas Turbine Engine Lubricants |

Rolls Royce Plc 30-Nov-16 15:35:09 21342 Mathias Schuler



© Rolls-Royce Plc 2001



This document is the property of Rolls-Royce plc and may not be copied or communicated to a third party or used for any purpose other than for which it is supplied without express written authority of Rolls-Royce plc

This is an uncontrolled copy and will not be kept up to date



| | |
|---|---|
| AS8879 | Screw Threads – UNJ Profile, Inch Controlled Radius Root with Increased Minor Diameter |
| AS50151 | Connectors, Electrical, Circular Threaded, AN Type, General Specification For |
| AS85421 | Fittings, Tube, Fluid Systems, Separable, Beam Seal, 3000/4000 psi, General Specification For |
| AS85720 | Fittings, Tube, Fluid Systems, Separable, High Pressure Dynamic Beam Seal, 5000/8000 psi, General Specifications For |

3.3 ISO Documents:

Available from International Organization for Standardization, 1, Ch. de la Voie-Creuse, Case Postale 56; CH-1211 Geneva 20, Switzerland, or http://www.iso.org/.

| | |
|---|---|
| ISO 3161 | Aerospace – UNJ threads – General requirements and limit dimensions |
| ISO 10012:2003 | Measurement Management Systems – Requirements For Measurement Processes And Measuring Equipment |

3.4 SAE Industry Technologies Consortia (ITC) Documents,

Available from SAE Aerospace Standards Europe, 1 York Street, London, W1U 6PA, UK or http://itc.sae.org/

| | |
|---|---|
| AS15700 to AS15711 | Nut, Union - Tube and Hose Coupling |
| AS27465 to AS27499 | Double - Ended Union, Tube |
| AS27900 to AS27949 | Plug, Machine Thread |
| AS63750 to AS63761 | Nut, Union, Tube and Hose Coupling |
| AS64350 to AS64362 | Nut, Union, Self Locking, Tube and Hose Coupling |

3.5 Rolls-Royce Documents:

Available internally from the Engineering Standards website http://www.capability.rolls-royce.com/design_standards/ and Teamcenter. Available externally from: **www.suppliermanager-online.com**

| | |
|---|---|
| ESC004 | High Temperature Electrical Connector (Generally To AS50151 Class K) |
| ESC10 | High Temperature Electrical Connectors (Generally to MIL-C-83723 series III K) |
| ESC11 | High temperature electrical connectors (100% scoop proof) |
| ESC15 | High temperature electrical connectors accommodating circular band, with/without heat shrinkable accessory facility. |
| ESC16 | High temperature electrical connectors accommodating circular band, with/without heat shrinkable accessory facility. |



© Rolls-Royce Plc 2001



This document is the property of Rolls-Royce plc and may not be copied or communicated to a third party or used for any purpose other than for which it is supplied without express written authority of Rolls-Royce plc

Rolls Royce Plc 30-Nov-16 16:35:08 213324 Mathias Schuller

This is an uncontrolled copy and will not be kept up to date



| | |
|---|---|
| MSRR 1102 | Tamper Evident Paint |
| MSRR 9055 | Universal Jointing Compound |
| RRES 90021 | Installation of Thinwall Self-Locking Inch Threaded Inserts |
| RRES 90033 | Installation of Inch Self-Locking Wire Thread Inserts |
| RRP 51000 | General Cleaning and Degreasing |

3.6 British Standards Institution (BSI) documents:

Available from BSI, 389 Chiswick High Road, London, W4 4AL, United Kingdom, http://www.bsigroup.com/en/

| | |
|---|---|
| BS 1580-1 | Unified screw threads Part 1: Screw threads with diameters ¼ in and larger - Requirements |

Rolls Royce Plc 30-Nov-16 15:35:08 213424 Mathias Schuler



© Rolls-Royce Plc 2001
This document is the property of Rolls-Royce plc and may not be copied or communicated to a third party or used for any purpose other than for which it is supplied without express written authority of Rolls-Royce plc

This is an uncontrolled copy and will not be kept up to date



4 DEFINITION OF TERMS:

Assembly Torque (Final Tightening Torque):
The assembly torque is the amount of torque to be applied to a threaded fastener when assembling. Such torque creates the desired clamping force in the parts being joined. It includes the net effect of the following: a) the torque required to overcome kinetic friction between mating bearing surfaces and between mating threads, and b) the torque required to overcome the self-locking feature (if any), and c) the torque required to generate the desired axial load in the threaded fastener.

Axial Loading:
Axial loading is the amount of force through the axis of a fastener as a result of tightening the fastener.

Breakaway Torque:
The breakaway torque is the amount torque required to initiate relative motion in a loosening direction between fasteners when the self-locking feature is fully engaged and there is no contact between the bearing surface of the threaded fastener and the surface of the part being joined.

Class 1 Torque:
A set of standard torque values used for most threaded parts including lower strength bolts (e.g., A286).

Class 2 Torque:
A set of higher torque values available for use with high strength bolts (e.g., Inco 718, Waspaloy and FV535).

DFL Fasteners:
Fasteners which threads have been coated with Dry Film Lubrication (DFL).

High Integrity Fastener:
The position and function of certain threaded fastenings is such that a single fastening failure (for whatever cause) is likely to lead to serious damage to the engine or substantial loss of engine power. These consequences can arise either through a loose fastener becoming a “foreign body” or through the loss of integrity of the attachment. Identification of such fasteners will typically be the result of FMECA review.

Light Alloy:
Alloy materials that have an ultimate shear strength of 240 MPa or less such as aluminum and magnesium.

Preload:
The amount of axial tensile load remaining in the bolt after torquing to the assembly torque value specified.

Prevailing Torque (Locking Torque or Drag Torque):
The torque required to overcome the kinetic friction between the male and female mating threads and the self-locking mechanism when 100% of the self-locking mechanism is engaged and there is no contact between the bearing surface of the threaded fastener and the surface of the part being joined. Prevailing torque does not include the torque required to create any axial load in the threaded fastener. Prevailing torque is measured with the fastener in motion and can be measured in either the loosening or tightening direction.

Rolls Royce Plc 30-Nov-16 15:35:08 24424 Matthias Schuller



© Rolls-Royce Plc 2001

This document is the property of Rolls-Royce plc and may not be copied or communicated to a third party or used for any purpose other than for which it is supplied without express written authority of Rolls-Royce plc

This is an uncontrolled copy and will not be kept up to date



Slave Bolts:
Slave bolts are bolts which are used in a temporary function to position, align or clamp parts during assembly. They do not remain on the final assembly of components. Slave bolts have the same threads as the required bolt but may have a different material, shank or length.

Thread Chasing:
The process of running a tool or mating fastener up/down threads to remove burrs, imperfections and foreign material.

Unseating Torque:
The torque required to initially move the threaded fastener from the assembly torque condition. The unseating torque is always measured in the loosening direction.

5 GENERAL:

5.1 Compliance:

5.1.1 When this specification is invoked by a component definition or assembly definition; compliance is mandatory. Additionally, the proper selection and use of an approved calibrated torque tool is required and the assembly processes and torque factors shall be controlled such that variances between like fasteners and assemblies are minimized.

5.1.2 Failure to comply with the requirements of this specification may result in the following:

a) Overloading which would result in eminent, immediate or future failure which is accelerated by an increase in temperature.
b) Insufficient loading could result in loosening and could give rise to 'panting' of a joint which would result in fastener fatigue failure.

5.2 Abnormalities:

5.2.1 Any abnormality that is encountered during the torquing process shall be reported promptly to the Quality Organization for proper disposition. Fasteners associated with an abnormality shall not be assembled without proper disposition. Items considered abnormalities include:

a) Items that give doubts with respect to the assembly, amount of torque required or proper use of torque tooling.
b) Evidence of thread galling, excessive prevailing toque or threaded fastener seizure
c) Fasteners not seating properly (squarely) against the fastener bearing surface
d) Damaged mating parts caused by assembly of threaded components.
e) Damaged fastener driving feature.
f) Difficulties arising from inadequate wrenching clearance or damaged wrenching features.
g) Difficulties arising from inadequate clearance for torque wrench or torque limiting screwdriver.
h) Faults with threaded inserts (key-locked, thinwall, or helical coil)
i) Contaminated, corroded, damaged or foreign matter in the threads
j) Incomplete plating or coating coverage in threads and bearing surfaces, if applicable
k) Inadequate or excessive prevailing torque of any self-locking fastener.
l) Instances of fasteners or fittings found loose after assembly.
m) Instances of fluid fittings leaking.
n) Yielded or "necked-down" threaded fasteners or other evidence of a fastener failure
o) Insufficient protrusion of threads. Thread protrusion beyond the end of a nut after torque tightening shall be a minimum of 1 1/2 thread pitches, See Figure 1.

Rolls Royce plc
30-Nov-16
12:33:08
2413324
Matthias Schuller



© Rolls-Royce Plc 2001

This document is the property of Rolls-Royce plc and may not be copied or communicated to a third party or used for any purpose other than for which it is supplied without express written authority of Rolls-Royce plc

This is an uncontrolled copy and will not be kept up to date



p) Insufficient threads. Interference of the nut threads with the unthreaded part of a bolt shank. See Figure 2

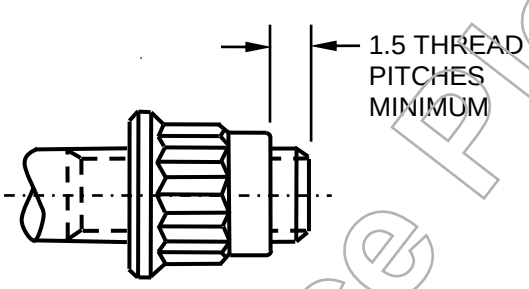


FIGURE 1 – MINIMUM THREAD PROTRUSION

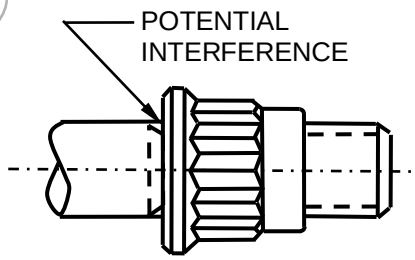


FIGURE 2 – INSUFFICIENT THREADS

5.3 High Integrity Fasteners:

5.3.1 If the fastener is designated as “High Integrity” on Component Definitions then the extra verification steps outlined in Section 9.2 shall apply.

6 ASSEMBLY REQUIREMENTS:

6.1 General Assembly Requirements:

6.1.1 Assembly Environment:

6.1.1.1 The assembly and tightening of fasteners shall be accomplished in a stable temperature environment. Prior to assembly, all parts and tools must be allowed to stabilize at the assembly environment temperature.

6.1.2 Re-use of Fasteners with Self Locking Features:

6.1.2.1 Fasteners with self-locking features wear quickly and have a limited re-use due to the decrease in friction between mating threads and the thread locking feature, Therefore, when re-using self-locking fasteners, the prevailing (drag) torque applied by the self-locking features shall be measured at installation to evaluate re-use acceptance. Table 1 lists the minimum acceptable prevailing torque values. Fasteners with self-locking features that do not meet the minimum prevailing torque requirements shall be replaced. Additionally, if the amount of torque to tighten a fastener prior to seating seems excessive and exceeds the maximum specified in Table 1 then one or the other fastener shall be replaced. Prior to replacing a self-locking insert, shank nut or anchor nut, the original bolt shall be replaced with a new unused bolt, and this unused bolt should be assembled and the prevailing torque shall be measured for acceptance. Attempts to alter thread locking features or to remove thread imperfections and burrs by thread chasing is prohibited.

6.1.2.2 For engine overhaul and re-use of self-locking fasteners, the prevailing torque (Table 1) may be checked utilizing a gauge as defined in Appendix B.

Rolls Royce Plc
30-Nov-16
1520-08
2184141
Matthias Schuller



© Rolls-Royce Plc 2001



This document is the property of Rolls-Royce plc and may not be copied or communicated to a third party or used for any purpose other than for which it is supplied without express written authority of Rolls-Royce plc

This is an uncontrolled copy and will not be kept up to date



TABLE 1 – PREVAILING TORQUE FOR SELF-LOCKING FASTENERS

| Nominal Inch Thread Size | Prevailing Torque | | | |
|---|---|---|---|---|
| | Minimum | | Maximum | |
| | Nm | lbf.in | Nm | lbf.in |
| .1380-32 | 0.11 | 1 | 0.9 | 8 |
| .1380-40 | 0.11 | 1 | 0.9 | 8 |
| .1640-32 | 0.17 | 1.5 | 1.24 | 11 |
| .1640-36 | 0.17 | 1.5 | 1.24 | 11 |
| .1900-32 | 0.23 | 2.0 | 1.69 | 15 |
| .2500-28 | 0.4 | 3.5 | 3.39 | 30 |
| .3125-24 | 0.73 | 6.5 | 6.78 | 60 |
| .3750-24 | 1.07 | 9.5 | 9.04 | 80 |
| .4375-20 | 1.58 | 14 | 11.3 | 100 |
| .5000-20 | 2.03 | 18 | 16.95 | 150 |
| .5625-18 | 2.71 | 24 | 22.6 | 200 |
| .6250-18 | 3.62 | 32 | 33.9 | 300 |

6.1.3 Use of Thread Locking or Sealing Compounds:

6.1.3.1 Thread locking and sealing compounds shall not be used unless specified. The use of these compounds result in unpredictable lubrication and/or drag depending on the substance and set times.

6.1.4 Fasteners Coated With Dry Film Lubricant (DFL):

6.1.4.1 Fasteners coated with dry film lubricant require special handling since the DFL coating can transfer onto equipment and personnel during the handling of these fasteners. Care should however be exercised to avoid migration to adjacent surfaces or personal equipment. Fasteners with dry film lubricated threads are recognized by their dark grey appearance, in contrast to the brighter silver coated parts.

6.1.4.2 Assembly of fasteners coated with dry film lubricant shall be per the procedure below.

a) Examine - Fasteners shall be verified as having the correct part identification. Inspection of the part number markings of DFL coated fasteners may require extra magnification and illumination due to the nature of the coating. Fasteners shall also be checked for completeness of coating coverage in threads and bearing surface. In cases of damaged, uneven or excessive coating on female threads, the Quality Organization shall be contacted for proper disposition

Rolls Royce plc 30-Nov-16 15:39:08 21/3/24 Matthias Schuller



© Rolls-Royce Plc 2001



This document is the property of Rolls-Royce plc and may not be copied or communicated to a third party or used for any purpose other than for which it is supplied without express written authority of Rolls-Royce plc

This is an uncontrolled copy and will not be kept up to date



b) Cleaning – Dry film lubricated parts shall not be solvent cleaned prior to use. In situations where such parts are mistakenly cleaned with cleaning agent to CSS255 / ARP1755 (category 12) there should be no detrimental effect on performance of the part. More aggressive cleaning processes could damage the coating and will require proper disposition from the Quality Organization.

c) Lubrication - Fasteners coated with dry film lubricant (DFL) shall be lubricated as required by Para. 6.2.2c unless otherwise specified.

d) Self-Locking Features - Same as other fasteners without DFL coating (Para. 6.2.2d).

e) Assembly – Same as other fasteners without DFL coating (Para. 6.2.2e).

f) Torque Tightening - Same as other fasteners without DFL coating (Para. 6.2.2f).

6.1.5 Assembly of Parts Containing a Seal between Joint Faces:

6.1.5.1 Where an O-Ring, gasket, or any other compressive medium is used between clamped faces the torque tightening sequence shall be per Section 8.4.7 to allow for compression set of the seal/gasket. For corrujoint seals, see Appendix C.

6.2 Bolts or Studs and Self-Locking or Free-Running Nuts or Self-Locking Inserts (Inch Thread):

6.2.1 Application:

This section applies only to the assembly of the following combinations of threaded fasteners:

a) Self-locking or free-running nuts assembled onto bolts (see Figure 3)

b) Self-locking or free-running nuts assembled onto the nut end of studs (see Figure 4)

c) Self-locking or free-running nuts assembled onto captive bolts (Dee or Tee head) (see Figure 5)

d) Bolts assembled into threaded holes (see Figure 6)

e) Bolts assembled into inserts or into self-locking inserts (see Figure 7)

f) Bolts assembled into self-locking captive nuts (see Figure 8)

g) Bolts assembled into self-locking plate nuts (see Figure 9)

h) Bolts assembled into self-locking clip nuts (see Figure 10)

i) Self-retaining bolts in self-locking nuts (see Figure 11)

Rolls Royce Plc 30-Nov-16 15:55:03 213424 Mathias Schuler



© Rolls-Royce Plc 2001



This document is the property of Rolls-Royce plc and may not be copied or communicated to a third party or used for any purpose other than for which it is supplied without express written authority of Rolls-Royce plc

This is an uncontrolled copy and will not be kept up to date



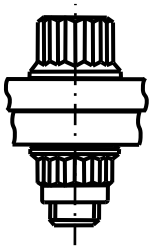

FIGURE 3 – SELF-LOCKING AND FREE RUNNING NUTS ON BOLTS

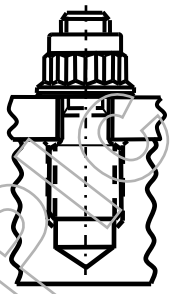

FIGURE 4 – SELF-LOCKING NUTS ON NUT END OF STUDS

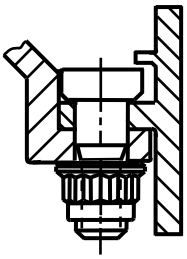

FIGURE 5 – SELF-LOCKING NUTS ON CAPTIVE BOLTS (DEE OR TEE HEAD)

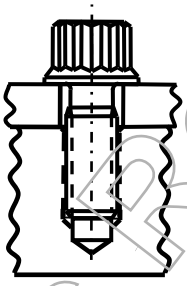

FIGURE 6 – BOLTS IN THREADED HOLES

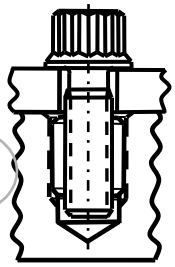

FIGURE 7 – BOLTS IN INSERTS AND SELF-LOCKING INSERTS

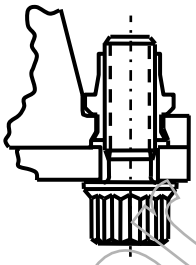

FIGURE 8 – BOLTS IN SELF-LOCKING CAPTIVE NUTS

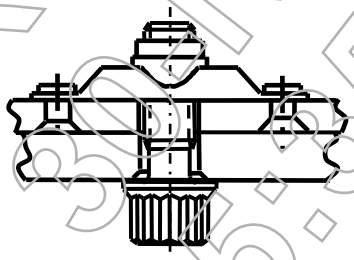

FIGURE 9 – BOLTS IN SELF-LOCKING PLATE NUTS

Rolls-Royce Plc
30-Nov-16
15:55:08
213424
Mathias Schuller



© Rolls-Royce Plc 2001
This document is the property of Rolls-Royce plc and may not be copied or communicated to a third party or used for any purpose other than for which it is supplied without express written authority of Rolls-Royce plc

This is an uncontrolled copy and will not be kept up to date



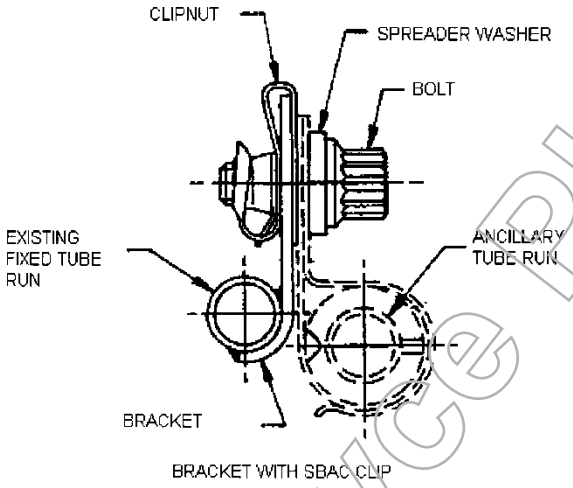


FIGURE 10 – BOLTS IN SELF-LOCKING CLIP NUTS

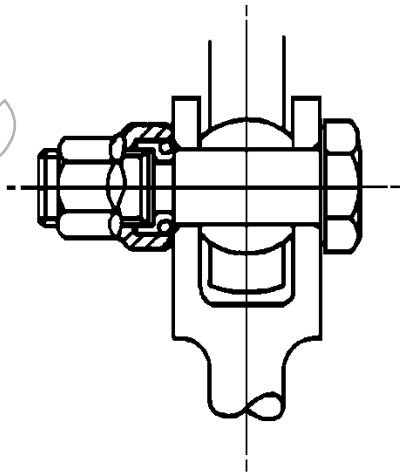

FIGURE 11 – SELF-RETAINING BOLTS IN SELF-LOCKING NUTS

6.2.2 Procedure:

The following assembly procedure shall apply: For DFL coated fasteners see Section 6.1.4.

a) Examine - Check the part numbers of the parts to be joined and the fastener(s) to ensure the selection of the correct parts for assembly. Check the condition of the parts to be joined and fasteners as described in Table 2 below:

TABLE 2 – EXAMINATION OF FASTENER CONDITION

| | |
|---|---|
| Parts to be joined | Examine the contact surfaces of the parts to be joined for cleanliness, and that they are free from damage, burrs and foreign matter. |
| Bolts, screws and studs | Examine the thread for cleanliness and freedom from damage and foreign matter. Examine the entire part for corrosion, and freedom from protective films or temporary protective coatings. |
| Nuts | Examine the part for cleanliness and freedom from damage, foreign matter, corrosion, protective films or temporary protective coatings (for DFL, see Para. 6.1.4). As far as possible, check the thread for freedom from damage and foreign matter that could affect assembly. |
| Washers (including small spacers and shims) | Examine the washer surfaces for cleanliness and freedom from damage, foreign matter, corrosion, protective films or temporary protective coatings. |
| Inserts | Examine the insert for the correct install depth. As far as possible, check the thread for freedom from damage and foreign matter that could affect assembly. |

Rolls Royce Plc 30-Nov-16 15:35:08 21 Page Schuler Matthias



© Rolls-Royce Plc 2001



This document is the property of Rolls-Royce plc and may not be copied or communicated to a third party or used for any purpose other than for which it is supplied without express written authority of Rolls-Royce plc

This is an uncontrolled copy and will not be kept up to date



b) Clean – If examining the parts as described in the table above and cleaning is then considered necessary, the fasteners, except those that are DFL coated, shall be cleaned to RRP 51000 using a non-halogenated cleaning agent per CSS255 / ARP 1755 (category 12) unless otherwise specified on the Component Definition. After cleaning, excess solvent shall be removed. Any parts exhibiting corrosion that cannot be removed by cleaning shall be rejected.

c) Lubricate - Clean engine oil per SAE AS5780, MIL-PRF-7808 or MIL-PRF-23699 shall be applied to the threads and to the bearing surface of the threaded fastener being torqued. If the torque is being applied to the nut (preferred) the lubricant shall be applied sparingly to the bearing surface of the nut and to the threads of the bolt or stud. If the torque is being applied to the bolt head (e.g. when used with an insert, blind hole, or captive nut) lubricant shall be applied sparingly to the threads, shank and bearing surface under the bolt head, see Figure 12. Excess lubricant shall be promptly removed to prevent contamination of adjacent components.

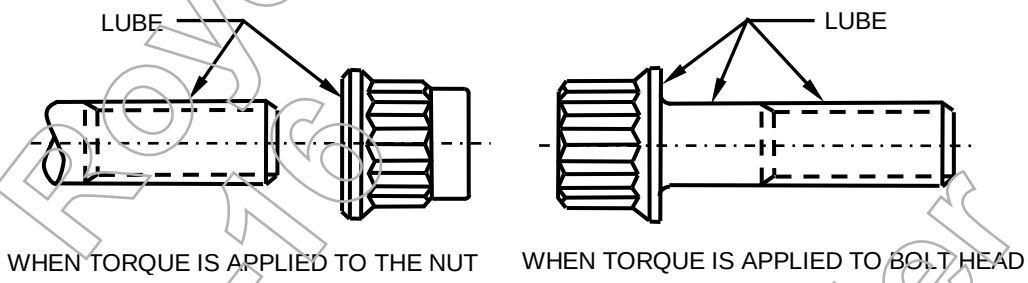


FIGURE 12 – LUBRICATION SURFACES

d) Self-Locking Features – For re-assembly or engine overhaul the self-locking features of fasteners shall be checked for prevailing torque per Section 6.1.2.

e) Assemble - When assembling, align the mating parts such that the clearance can be maintained between each bolt shank and clearance hole to minimize torque reading errors caused by friction (if they contact). Tighten fasteners until all parts contact and can maintain the aligned position. For fasteners without self-locking features this will be finger tight. For fasteners with self-locking features this will be when all clearance between joined parts has been removed.

Note: When tightening nuts on Dee or Tee head bolts, ensure the head is correctly aligned and seated into the trap.

f) Torque Tighten – The fasteners of the assembly shall be tightened to the assembly torque values as specified in Table 3 to the requirements of the Component Definition (Class 1, Class 2, or stated value) in accordance with Section 8. When an assembly torque value or torque class is not specified, class 1 assembly torque shall apply.

Rolls Royce plc 30-Nov-16 15:39:08 21 3124 Mathias Schuler



© Rolls-Royce Plc 2001



This document is the property of Rolls-Royce plc and may not be copied or communicated to a third party or used for any purpose other than for which it is supplied without express written authority of Rolls-Royce plc

This is an uncontrolled copy and will not be kept up to date



TABLE 3 – ASSEMBLY TORQUE VALUES FOR BOLTS AND SELF-LOCKING OR FREE RUNNING NUTS (INCH THREAD)

| Nominal Inch Thread Size | **Class 1** Assembly Torque | | |
|---|---|---|---|
| | Nm | lbf.in | lbf.ft |
| .1640 Nominal Inch Dia. or Less | See Screws, Section 6.5 | | |
| .1900-32 | 5.3 | 47 | - |
| .2500-28 | 12.4 | 110 | - |
| .3125-24 | 24.3 | 215 | - |
| .3750-24 | 42.9 | 380 | - |
| .4375-20 | 67.8 | 600 | - |
| .5000-20 | 103 | - | 76 |
| .5625-18 | 148 | - | 109 |
| .6250-18 | 207 | - | 153 |

| Nominal Inch Thread Size | **Class 2** Assembly Torque | | |
|---|---|---|---|
| | Nm | lbf.in | lbf.ft |
| .1640 Nominal Inch Dia. or Less | Not Applicable | | |
| .1900-32 | 6.6 | 58 | - |
| .2500-28 | 15.3 | 135 | - |
| .3125-24 | 30 | 265 | - |
| .3750-24 | 52.5 | 465 | - |
| .4375-20 | 83 | - | 61 |
| .5000-20 | 127 | - | 94 |
| .5625-18 | 182 | - | 134 |
| .6250-18 | 254 | - | 187 |

***CAUTION** - CLASS 2 ASSEMBLY TORQUES SHALL NOT BE APPLIED TO CLASS 1 APPLICATIONS. ASSEMBLY TORQUES MISAPPLIED MAY RESULT IN FASTENER FAILURE.

Rolls Royce plc
30-Nov-2018
15:35:18
213424
Mathias Schuller



© Rolls-Royce Plc 2001



This document is the property of Rolls-Royce plc and may not be copied or communicated to a third party or used for any purpose other than for which it is supplied without express written authority of Rolls-Royce plc

This is an uncontrolled copy and will not be kept up to date



6.3 Slotted or Castellated Type Nuts (Inch Thread):

6.3.1 Application:

This section only applies to the assembly of nuts that require alignment for the insertion of a locking device such as a cotter pin or spring pin. Common types of slotted of castellated nuts are as follows:

- Plain Hex Slotted or Castellated Nuts
- Drilled Hex Slotted or Castellated Nuts
- Castellated Nuts: Figure 13

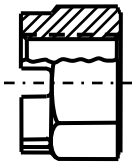

FIGURE 13 – CASTELLATED NUTS

6.3.2 Procedure:

a) Examine – Check the nut part numbers and examine fasteners to ensure the selection of correct parts for assembly. Examine the fastener thread and mating thread condition for cleanliness and freedom from damage, foreign matter, corrosion, protective films or temporary protective coatings. Where applicable, check for completeness and evenness of plating or coating coverage in threads and bearing surfaces.

b) Lubricate - Lubricate the nut mating surface and threads with a small amount clean engine oil per SAE AS5780, MIL-PRF-7808, MIL-PRF-23699 or equivalent), wipe any excess lubricant from the threads to prevent contamination of adjacent components.

c) Assemble – Assemble the part ensuring the nut is properly aligned and finger tighten. The nut should turn freely and smoothly.

d) Torque Tighten – The nuts shall be tightened to the minimum assembly torque specified in Table 4 in accordance with Section 8. Then carefully torque tighten further to the next alignment feature but do not exceed the Class 1 assembly torques of Table 3. Under no circumstances shall the nut be 'slackened off' to achieve a locking position.

Rolls Royce Plc 30-Nov-16 15:55:08 213.224 Mathias Schuler



© Rolls-Royce Plc 2001



This document is the property of Rolls-Royce plc and may not be copied or communicated to a third party or used for any purpose other than for which it is supplied without express written authority of Rolls-Royce plc

This is an uncontrolled copy and will not be kept up to date



TABLE 4 – ASSEMBLY TORQUE VALUES FOR SLOTTED OR CASTELLATED TYPE NUTS (INCH THREAD)

| Nominal Inch Thread Size | Assembly Torque Minimum | | |
|---|---|---|---|
| | Nm | lbf.in | lbf.ft |
| .1640-36 | 2.5 | 22 | - |
| .1900-32 | 4 | 35 | - |
| .2500-28 | 9.3 | 82 | - |
| .3125-24 | 18.2 | 161 | - |
| .3750-24 | 32.2 | 285 | - |
| .4375-20 | 50.8 | 450 | - |
| .5000-20 | 79 | - | 58 |
| .5625-18 | 111 | - | 82 |
| .6250-18 | 155 | - | 114 |
| .7500-16 | 271 | - | 200 |
| .8750-14 | 420 | - | 310 |
| 1.000-12 | 637 | - | 470 |

Rolls Royce plc
30-Nov-16
15:35:08
213424
Mathias Schuller



© Rolls-Royce Plc 2001
This document is the property of Rolls-Royce plc and may not be copied or communicated to a third party or used for any purpose other than for which it is supplied without express written authority of Rolls-Royce plc

This is an uncontrolled copy and will not be kept up to date



6.4 Shaft Nuts:

6.4.1 Application:

This section only applies to the assembly of spanner nuts, round plain nuts and other nuts that are assembled onto rotating shafts. See Figure 14.

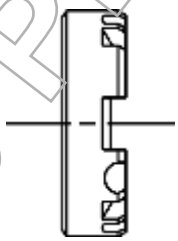

FIGURE 14 – SHAFT NUTS

6.4.2 Procedure:

a) Examine – Check the fastener part numbers and inspect fasteners to ensure the selection of the correct parts for assembly. Examine the fastener thread and mating thread condition for cleanliness and freedom from damage, foreign matter, corrosion, protective films or temporary protective coatings. Where applicable, check for completeness and evenness of plating or coating coverage in threads and bearing surfaces.

b) Lubricate - Lubricate the shaft threads and nut mating surface with a small amount of clean engine oil per SAE AS5780, MIL-PRF-7808 or MIL-PRF-23699. Wipe any excess lubricant from the threads to prevent contamination of adjacent components.

c) Assemble – Assemble the part ensuring the nut is properly aligned and finger tighten. The nut should turn freely and smoothly.

d) Torque Tighten – The nuts shall be tightened to the assembly torque specified on the component definition drawing in accordance with Section 8.

Rolls Royce Plc
30-Nov-15
15:35:08
213424
Mathias Schuler



© Rolls-Royce Plc 2001
This document is the property of Rolls-Royce plc and may not be copied or communicated to a third party or used for any purpose other than for which it is supplied without express written authority of Rolls-Royce plc

This is an uncontrolled copy and will not be kept up to date



6.5 Screws (Inch Thread):

6.5.1 Application:

This section applies to the assembly of screws utilizing any of the following combinations of threaded fasteners. Screws have heads with internal driving features or have nominal diameters .1640 inch or less with any head type. Common aerospace screws have driving heads shown in Figure 15.

- Self-locking or free-running nuts assembled onto screws.
- Screws assembled into tapped holes.
- Screws assembled into inserts or into self-locking inserts.
- Screws assembled into self-locking captive nuts.
- Screws assembled into self-locking plate nuts.
- Screws assembled into self-locking clip nuts

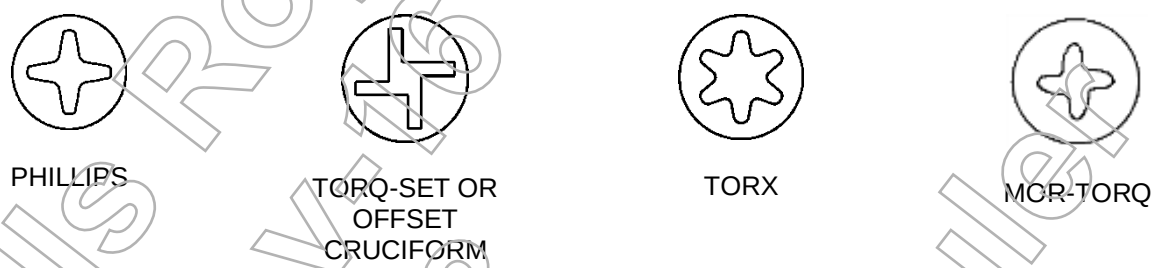


FIGURE 15 – COMMON AEROSPACE SCREW HEAD TYPES

6.5.2 Procedure:

a) Examine – Check the fastener part numbers to ensure the selection of the correct parts for assembly. Examine the fastener thread and mating thread condition for cleanliness and freedom from damage, foreign matter, corrosion, protective films or temporary protective coatings. Where applicable, check for completeness and evenness of plating or coating coverage in threads and bearing surfaces.

b) Lubricate - Clean engine oil per SAE AS5780, MIL-PRF-7808 or MIL-PRF-23699 shall be applied to the threads and to the bearing surface of the screw. Wipe any excess lubricant from the threads to prevent contamination of adjacent components. No lubrication shall be applied to screws used for assembling of parts related to electrical components due to the possibility of contamination (excludes mounting or clipping).

c) Self-Locking Features – For re-assembly or engine overhaul the self-locking features of fasteners shall be checked for prevailing torque per Section 6.1.2.

d) Assemble - When assembling, align the mating parts such that the clearance can be maintained between each screw shank and clearance hole to minimize torque reading errors caused by friction (if they contact). Tighten fasteners until all parts contact and can maintain the aligned position. For fasteners without self-locking features this will be finger tight. For fasteners with self-locking features this will be when all clearance between joined parts has been removed.



© Rolls-Royce Plc 2001

This document is the property of Rolls-Royce plc and may not be copied or communicated to a third party or used for any purpose other than for which it is supplied without express written authority of Rolls-Royce plc

This is an uncontrolled copy and will not be kept up to date



e) Torque Tighten - The fasteners of the assembly shall be tightened to the assembly torque values as specified in Table 5 in accordance with Section 8. For fasteners having nominal diameters less than .1380 inch, the assembler must use his own skill and judgement to determine that the fasteners are adequately tightened.

TABLE 5 – STANDARD CLASS 1 ASSEMBLY TORQUES FOR UNJC AND UNJF THREADED SCREWS

| Nominal Thread Size | Assembly Torque* | |
|---|---|---|
| UNJF | Nm | lbf.in |
| .1380-40 UNJF | 1.1 | 10 |
| .1640-36 UNJF | 1.7 | 15 |
| .1900-32 UNJF | 4.5 | 40 |
| .2500-28 UNJF | 11.3 | 100 |
| .3125-24 UNJF | 23.7 | 210 |
| .3750-24 UNJF | 41.8 | 370 |

| Nominal Thread Size | Assembly Torque* | |
|---|---|---|
| UNJC | Nm | lbf.in |
| .1380-32 UNJC | 1 | 9 |
| .1640-32 UNJC | 1.6 | 14 |

*Note: These torque values are lower than those for externally driven fasteners, due to the lower performance capability of the internal drive recess

Rolls Royce Plc
30-Nov-16
15:35:08
213424
Mathias Schuller



© Rolls-Royce Plc 2001



This document is the property of Rolls-Royce plc and may not be copied or communicated to a third party or used for any purpose other than for which it is supplied without express written authority of Rolls-Royce plc

This is an uncontrolled copy and will not be kept up to date



6.6 37º Flare Tube or Hose Fittings and Hose Coupling Nuts:

6.6.1 Application:

This Section deals with the assembly of the following combinations of 37 degree flared fitting threaded fasteners only:

- Tube and hose coupling nuts. See Figure 16.
- Tube and hose coupling nuts used with Ring Lock port fittings. See Figure 17.

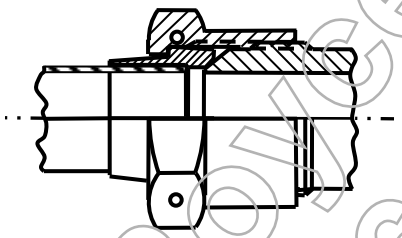

FIGURE 16 – TUBE AND HOSE COUPLING NUT

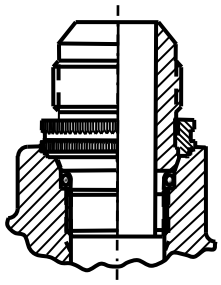

FIGURE 17 – TUBE AND HOSE COUPLING NUTS WITH RING-LOCK PORT FITTING

6.6.2 Procedure:

a) Examine - Check the fitting part number to ensure the selection of the correct parts for assembly. Examine the fastener thread and mating thread condition for cleanliness and freedom from damage, foreign matter, corrosion, protective films or temporary protective coatings.

b) Lubricate – Lubricate the male threads and nut mating surface with small amount clean engine oil per SAE AS 5780, MIL-PRF-7808 or MIL-PRF-23699. Wipe any excess lubricant from the threads to prevent contamination of adjacent components.

c) Assemble - Align the tube and hose with mating fitting and start the nut on the mating threads finger tight.

d) Torque Tighten – Tighten the tube (hose) coupling nut to the assembly torque value specified in Table 6 in accordance with Section 8. Restrain the male tube (hose) fitting from turning with a suitable open end wrench to prevent damage to the tube/hose during torquing.

Rolls Royce Plc 30-Nov-16 15:55:06 213424 Mathias Schuler



© Rolls-Royce Plc 2001
This document is the property of Rolls-Royce plc and may not be copied or communicated to a third party or used for any purpose other than for which it is supplied without express written authority of Rolls-Royce plc

This is an uncontrolled copy and will not be kept up to date



TABLE 6 – ASSEMBLY TORQUE REQUIREMENTS FOR 37º FLARE TUBE AND HOSE COUPLING NUTS

| Fitting Dash No. (Ref) | Tube Size (OD) Inch | Nominal Inch Thread Size | Assembly Torque | | | | | |
|---|---|---|---|---|---|---|---|---|
| | | | Aluminum Nut | | | Steel & Titanium Nut | | |
| | | | Nm | lbf.in | lb.ft | Nm | lbf.in | lb.ft |
| 02 | .125 | .3125-24 | 2.8 | 25 | - | 5.1 | 45 | - |
| 03 | .188 | .3750-20 | 4 | 35 | - | 10.2 | 90 | - |
| 04 | .250 | .4375-20 | 5.6 | 50 | - | 14.7 | 130 | - |
| 05 | .312 | .5000-20 | 7.3 | 65 | - | 19.8 | 175 | - |
| 06 | .375 | .5625-18 | 10.7 | 95 | - | 31.1 | 275 | - |
| 08 | .500 | .7500-16 | 21.5 | 190 | - | 53.7 | 475 | - |
| 10 | .625 | .8750-14 | 29.4 | 260 | - | 76 | - | 56 |
| 12 | .750 | 1.0625-12 | 42.4 | 375 | - | 107 | - | 79 |
| 16 | 1.000 | 1.3125-12 | 63.8 | 565 | - | 146 | - | 108 |
| 20 | 1.250 | 1.625-12 | 80 | - | 59 | 187 | - | 138 |
| 24 | 1.500 | 1.875-12 | 96 | - | 71 | 232 | - | 171 |
| 28 | 1.750 | 2.250-12 | 110 | - | 81 | 277 | - | 204 |
| 32 | 2.000 | 2.500-12 | 122 | - | 90 | 310 | - | 229 |

Rolls Royce plc
30-Nov-16
15:35:08
213424
Mathias Schuller



© Rolls-Royce Plc 2001



This document is the property of Rolls-Royce plc and may not be copied or communicated to a third party or used for any purpose other than for which it is supplied without express written authority of Rolls-Royce plc

This is an uncontrolled copy and will not be kept up to date



6.7 37º Flare Tube and Hose Fittings in Housing Bosses or Bulkheads:

6.7.1 Application:

This Section deals with the assembly of the following combinations of 37 degree flared fitting threaded fasteners only:

- Straight sealed boss connectors (nipples) with O-rings in housing bosses. See Figure 18
- Jam nuts used to position/seal elbows and tees in housing bosses. See Figure 19
- Jam nuts used to position/seal bulkhead fittings (straight, elbows, tees). See Figure 20

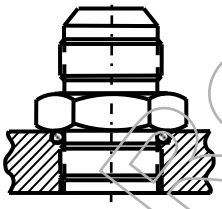

FIGURE 18 – STRAIGHT SEALED BOSS CONNECTORS (NIPPLES) WITH O-RINGS IN HOUSING BOSSES

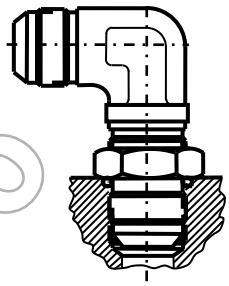

FIGURE 19 – JAM NUTS USED TO POSITION/SEAL ELBOWS AND TEES IN HOUSING BOSSES

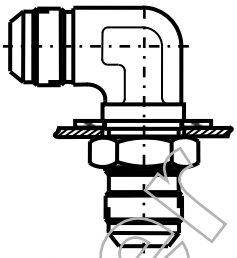

FIGURE 20 – JAM NUTS USED TO POSITION/SEAL BULKHEAD FITTINGS

6.7.2 Procedure:

a) Examine - Check the fitting part number to ensure the selection of the correct part for assembly. Examine the fastener thread and mating thread condition for cleanliness and freedom from damage, foreign matter, corrosion, protective films or temporary protective coatings.

b) Lubricate – Lubricate the threads, sealing surfaces and O-Ring packing (if applicable) with clean engine oil per SAE AS5780, MIL-PRF-7808 or MIL-PRF-23699. Wipe any excess lubricant from the threads to prevent contamination of adjacent components.

c) Assemble and Torque Tighten - The following are the assembly and torque tightening requirements for the various applications:

- For <u>straight sealing boss connectors with O-rings assembled into housing bosses</u> – Install lubricated O-ring into connector groove. Install connector into boss hole. Ensure the connector axis is aligned square to hole entrance and turn the connector to start threads. The connector should turn easily and smoothly until finger tight. Torque the connector to the proper value specified in Table 7 in accordance with Section 8.

Rolls Royce Plc 30-Nov-16 15:55:08 215422 Matthias Schuler



© Rolls-Royce Plc 2001



This document is the property of Rolls-Royce plc and may not be copied or communicated to a third party or used for any purpose other than for which it is supplied without express written authority of Rolls-Royce plc

This is an uncontrolled copy and will not be kept up to date



- For jam nuts used to position/seal elbows and tees assembled into housing bosses - Install nut onto connector as far as possible with finger pressure. Install lubricated O-ring packing onto connector groove. Turn the nut against the o-ring packing until the O-ring packing is firmly seated against the lower threaded portion of the connector. Keep the nut turning with the connector and install the connector into the boss hole until the O-ring packing contacts the boss surface. Hold the nut in position with an open end wrench (keep from turning) and install the connector 1 1/2 more turns into the boss. Turn the connector up to 1 more complete turn to its desired orientation. Hold the connector in position and torque the jam nut to the proper value specified in Table 7 in accordance with Section 8.
- For jam nuts used to position/seal bulkhead connectors - Install the connector into the hole in the bulkhead. Hold the connector in the desired position and torque the jam nut to the proper value specified in Table 7 in accordance with Section 8.

TABLE 7 –TORQUE REQUIREMENTS FOR JAM NUTS USED FOR POSITIONING 37º FLARE TUBE AND HOSE FITTINGS IN HOUSING BOSSES OR BULKHEADS

| Fitting Dash No. (Ref) | Tube Size (OD) Inch | Nominal Inch Thread Size | Assembly Torque | | | | |
|---|---|---|---|---|---|---|---|
| | | | Jam Nut or Straight Connector W/O-Ring | | | Jam Nut in Bulkhead | |
| | | | Nm | lbf.in | lbf.ft | Nm | lbf.in |
| 02 | .125 | .3125-24 | 2.6 | 23 | - | 2.6 | 23 |
| 03 | .188 | .3750-20 | 3.4 | 30 | - | 3.4 | 30 |
| 04 | .250 | .4375-20 | 4.5 | 40 | - | 4.5 | 40 |
| 05 | .312 | .5000-20 | 6.8 | 60 | - | 6.8 | 60 |
| 06 | .375 | .5625-18 | 8.5 | 75 | - | 8.5 | 75 |
| 08 | .500 | .7500-16 | 16.9 | 150 | - | 16.9 | 150 |
| 10 | .625 | .8750-14 | 22.6 | 200 | - | 22.6 | 200 |
| 12 | .750 | 1.0625-12 | 33.9 | 300 | - | 22.6 | 200 |
| 16 | 1.000 | 1.3125-12 | 56.5 | 500 | - | 22.6 | 200 |
| 20 | 1.250 | 1.625-12 | 68 | - | 50 | 22.6 | 200 |
| 24 | 1.500 | 1.875-12 | 68 | - | 50 | 22.6 | 200 |
| 28 | 1.750 | 2.250-12 | 68 | - | 50 | 22.6 | 200 |
| 32 | 2.000 | 2.500-12 | 68 | - | 50 | 22.6 | 200 |

Rolls Royce plc 30-Nov-16 15:35:08 21343127 Matthias Schulz



© Rolls-Royce Plc 2001



This document is the property of Rolls-Royce plc and may not be copied or communicated to a third party or used for any purpose other than for which it is supplied without express written authority of Rolls-Royce plc

This is an uncontrolled copy and will not be kept up to date



6.8 Beam Seal Fluid Fittings:

6.8.1 Application:

This Section deals with the assembly of dynamic beam seal fluid fittings SAE AS85421 and AS85720 as follows:

- Tube and hose beam seal nuts. See Figure 21.
- Tube and hose beam seal nuts used in conjunction with beam seal Ring-Lock port fittings. See Figure 22.

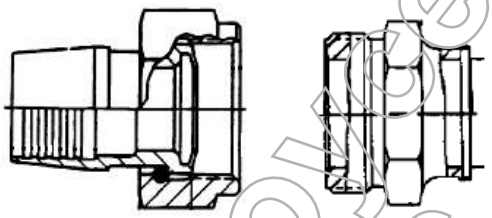

FIGURE 21 – TUBE AND HOSE BEAM SEAL NUTS

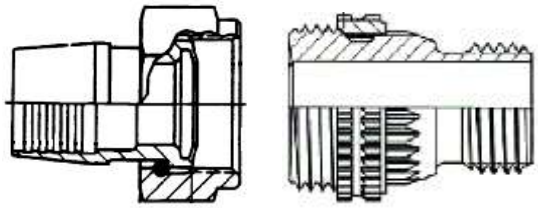

FIGURE 22 – TUBE AND HOSE BEAM SEAL NUTS USED IN CONJUNCTION WITH BEAM SEAL RING-LOCK PORT FITTING

6.8.2 Procedure:

a) Examine – Check the fitting/tube assembly part numbers to ensure the selection of the correct parts. Examine the fastener thread and mating thread condition for cleanliness and freedom from damage, foreign matter, corrosion, protective films or temporary protective coatings. Where applicable, check for excessive wear of coating coverage in threads and bearing surfaces.

b) No Lubrication – Dynamic Beam seal fitting are coated with dry film lubricant.

c) Assemble – Ensure that the sealing surfaces of the two members are aligned by pulling back the beam seal nut. Start the nut on the mating threads finger tight.

d) Torque Tighten – Tighten the tube (hose) beam seal nut to the assembly torque value specified in Table 8 and to the requirements of the Component Definition (Class 1, Class 2 or stated value) in accordance with Section 8 while restraining the male fitting with a suitable open end wrench. Restraining of the male fitting is not required when the tube (hose) beam seal nut is used in conjunction with a ring-lock port fitting.

Rolls Royce plc 30-Nov-16 15:35:08 213244 Mathias Schuler



© Rolls-Royce Plc 2001



This document is the property of Rolls-Royce plc and may not be copied or communicated to a third party or used for any purpose other than for which it is supplied without express written authority of Rolls-Royce plc

This is an uncontrolled copy and will not be kept up to date



TABLE 8 – ASSEMBLY TORQUE VALUES DYNAMIC BEAM SEAL FITTINGS

| Fitting Dash Size (Ref.) | Nominal Tube Size, Inch (Ref) | Nominal Inch Thread Size | **Class 1** Assembly Torque | | |
|---|---|---|---|---|---|
| | | | Nm | lbf.in | lbf.ft |
| 3 | .188 | .3750-28 | 11.6 | 103 | - |
| 4 | .250 | .4375-24 | 18.1 | 160 | - |
| 5 | .312 | .5000-24 | 20.7 | 183 | - |
| 6 | .375 | .5625-20 | 32.2 | 285 | - |
| 8 | .500 | .7188-20 | 51.4 | 455 | - |
| 10 | .625 | .8438-18 | 71 | - | 52 |
| 12 | .750 | 1.000-16 | 89 | - | 66 |
| 14 | .875 | 1.125-16 | 110 | - | 81 |
| 16 | 1.000 | 1.250-14 | 148 | - | 109 |

| Fitting Dash Size (Ref.) | Nominal Tube Size, Inch (Ref) | Nominal Inch Thread Size | **Class 2** Assembly Torque | | |
|---|---|---|---|---|---|
| | | | Nm | lbf.in | lbf.ft |
| 3 | .188 | .3750-28 | - | - | |
| 4 | .250 | .4375-24 | 19.2 | 170 | |
| 5 | .312 | .5000-24 | 22 | 195 | |
| 6 | .375 | .5625-20 | 34.5 | 305 | |
| 8 | .500 | .7188-20 | 55.9 | 495 | |
| 10 | .625 | .8438-18 | 77 | | 57 |
| 12 | .750 | 1.000-16 | 99 | | 73 |
| 14 | .875 | 1.125-16 | - | | - |
| 16 | 1.000 | 1.250-14 | 163 | | 120 |

Rolls Royce plc 30-Nov-16 15:35:08 21342A Mathias Schuler



© Rolls-Royce Plc 2001
This document is the property of Rolls-Royce plc and may not be copied or communicated to a third party or used for any purpose other than for which it is supplied without express written authority of Rolls-Royce plc

This is an uncontrolled copy and will not be kept up to date



6.9 Tube and Hose Fittings, Unions and Blanking Plugs:

6.9.1 Application:

This Section deals with the assembly of fitting unions and blanking plugs. For specific application see below:

- Unions, AS27465 series: See Figure 23.
- Blanking Plugs, AS27900 or SAE AS3001 series: See Figure 24.

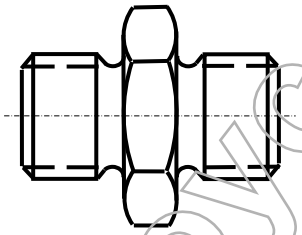

FIGURE 23 – UNION

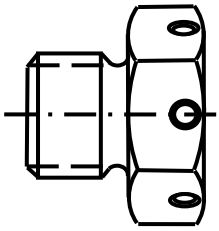

FIGURE 24 - BLANKING PLUG

6.9.2 Procedure:

a) Examine – Check the fitting part numbers and examine fittings to ensure the selection of the correct parts for assembly. Examine the fastener thread and mating thread condition for cleanliness and freedom from damage, foreign matter, corrosion, protective films or temporary protective coatings.

b) Lubricate - Lubricate the male threads of fittings and abutment faces with a small amount (one or two drops) of clean engine oil per SAE AS5780, MIL-PRF-23699 or MIL-PRF-7808. Wipe any excess lubricant from the lead threads to prevent it from entering the system.

Note: When magnesium is in contact with the fittings, jointing compound to (PL 32L) shall be used as a lubricant in lieu of engine oil. A small amount of the jointing compound shall be applied evenly to the threads and abutment faces and shall be allowed to evaporate for approximately 10 minutes until dry. Care shall be exercised to avoid excess compound from getting in contact with rubber seals.

c) Assemble – Assemble the fittings ensuring they are properly aligned and finger tighten. The fittings should turn freely and smoothly without undue straining.

d) Torque Tighten – Torque tighten the fittings to the appropriate values in accordance with Section 8. The torque tightening values for unions and blanking plugs are listed in Table 9. When blanking plugs are installed into light alloys the torque tightening values in Table 10 should be used.

Rolls Royce Plc 30-Nov-16 15:55:08 2134241 Matthias Schuller



© Rolls-Royce Plc 2001



This document is the property of Rolls-Royce plc and may not be copied or communicated to a third party or used for any purpose other than for which it is supplied without express written authority of Rolls-Royce plc

This is an uncontrolled copy and will not be kept up to date



TABLE 9 - ASSEMBLY TORQUE REQUIREMENTS UNIONS AND BLANKING PLUGS

| Nominal Inch Thread Size | Part Numbers | | | Assembly Torque | | |
|---|---|---|---|---|---|---|
| | Unions | Blanking Plugs | | Nm | lbf.in | lbf.ft |
| .2500-28 | - | AS27901 | AS3001-01 | 5 | 44 | - |
| .3125-24 | - | AS27902 | AS3001-02 | 9 | 80 | - |
| .3750-24 | - | AS27903 | AS3001-03 | 12.4 | 110 | - |
| .4375-20 | AS27466 | AS27904 | AS3001-04 | 29.8 | 175 | - |
| .5000-20 | AS27467 | AS27905 | AS3001-05 | 23.2 | 205 | - |
| .5625-18 | - | AS27906 | AS3001-06 | 26 | 230 | - |
| .6250-18 | AS27468 | AS27907 | AS3001-07 | 29.4 | 260 | - |
| .7500-16 | AS27471 | AS27908 | AS3001-08 | 36.2 | 320 | - |
| .8125-16 | AS27472 | AS27909 | AS3001-09 | 40.1 | 355 | - |
| .8750-14 | AS27473 | AS27910 | AS3001-10 | 44.1 | 390 | - |
| 1.0625-12 | AS27475 | AS27912 | AS3001-12 | 57.1 | 505 | - |
| 1.1875-12 | AS27477 | AS27914 | AS3001-14 | 68 | - | 50 |
| 1.3125-12 | AS27479 | AS27916 | AS3001-16 | 80 | - | 59 |
| 1.6250-12 | AS27483 | AS27920 | AS3001-10 | 119 | - | 88 |
| 1.8750-12 | AS27487 | AS27924 | AS3001-24 | 161 | - | 119 |

Rolls Royce plc
30-Nov-18
15:35:08
213424
Mathias Schuller



© Rolls-Royce Plc 2001



This document is the property of Rolls-Royce plc and may not be copied or communicated to a third party or used for any purpose other than for which it is supplied without express written authority of Rolls-Royce plc

This is an uncontrolled copy and will not be kept up to date



TABLE 10 – ASSEMBLY TORQUE REQUIREMENTS FOR BLANKING PLUGS AND PLUGS ASSEMBLED INTO LIGHT ALLOYS

| Nominal Inch Thread Size | Part Numbers Blanking Plugs | | Assembly Torque | |
|---|---|---|---|---|
| | | | Nm | lbf.in |
| .2500-28 | AS27901 | AS3001-01 | 2.3 | 20 |
| .3125-24 | AS27902 | AS3001-02 | 3.4 | 30 |
| .3750-24 | AS27903 | AS3001-03 | 5.1 | 45 |
| .4375-20 | AS27904 | AS3001-04 | 7.3 | 65 |
| .5000-20 | AS27905 | AS3001-05 | 10.2 | 90 |
| .5625-18 | AS27906 | AS3001-06 | 10.2 | 90 |
| .6250-18 | AS27907 | AS3001-07 | 15.8 | 140 |
| .7500-16 | AS27908 | AS3001-08 | 20.3 | 180 |
| .8125-16 | AS27909 | AS3001-09 | 20.3 | 180 |
| .8750-14 | AS27910 | AS3001-10 | 20.3 | 180 |

Rolls Royce plc 30-Nov-16 15:35:08 213424 Mathias Schuler



© Rolls-Royce Plc 2001



This document is the property of Rolls-Royce plc and may not be copied or communicated to a third party or used for any purpose other than for which it is supplied without express written authority of Rolls-Royce plc

This is an uncontrolled copy and will not be kept up to date



6.10 60° Tube and Hose Union Nuts, Free Running and Self Locking:

6.10.1 Application:

This Section deals with the assembly of union nuts, thrust wire and shouldered type used to secure tubes and hoses. For specific application see below:

- Free running union nuts AS15700 and AS63750 series: Figure 25
- Self-locking union nuts AS64350-62 series: Figure 26.

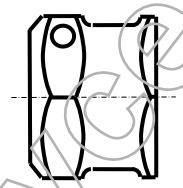

FIGURE 25 – UNION NUTS

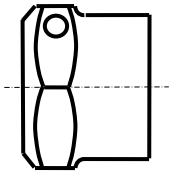

FIGURE 26 – SELF-LOCKING UNION NUTS

6.10.2 Procedure:

a) Examine. Check the union nut part numbers and examine the nut to ensure the selection of the correct part for assembly. Examine the fastener thread and mating thread condition for cleanliness and freedom from damage, foreign matter, corrosion, protective films or temporary protective coatings.

b) Lubricate – Lubricate the male threads of union and nipple with a small amount (one or two drops) of clean engine oil per SAE AS5780, MIL-PRF-7808 or MIL-PRF-23699. Wipe any excess lubricant from the lead threads to prevent it from entering the system.

c) Self-Locking Features – Prior to torque tightening, union nuts with self-locking features that are being re-used after engine strip or repair, shall be inspected for meeting the applicable prevailing torque requirements of Table 11. If the torque value is outside the range the condition shall be reported promptly to the Rolls-Royce Quality Organization for proper disposition.

Rolls Royce plc
30-Nov-16
15:35:08
213424
Mathias Schuler



© Rolls-Royce Plc 2001



This document is the property of Rolls-Royce plc and may not be copied or communicated to a third party or used for any purpose other than for which it is supplied without express written authority of Rolls-Royce plc

This is an uncontrolled copy and will not be kept up to date



TABLE 11 – PREVAILING TORQUE REQUIREMENTS FOR SELF-LOCKING UNION NUTS

| Nominal Inch Thread Size | Part Numbers | Prevailing Torque | | | |
|---|---|---|---|---|---|
| | | Nm | | lbf.in | |
| | | Min. | Max. | Min. | Max. |
| .4375-20 | AS64350 | 1.4 | 11 | 12 | 97 |
| .5000-20 | AS64351 | 1.5 | 12 | 13 | 106 |
| .6250-18 | AS64352 | 1.6 | 13 | 14 | 115 |
| .6875-16 | AS64353 | 1.7 | 13.9 | 15 | 123 |
| .7500-16 | AS64354 | 2.1 | 15 | 19 | 133 |
| .8125-16 | AS64355 | 1 | 9.9 | 9 | 88 |
| .8750-14 | AS64356 | 1.4 | 11 | 12 | 97 |
| 1.0625-12 | AS64357 | 4.6 | 16 | 41 | 142 |
| 1.1875-12 | AS64358 | 5.1 | 18 | 45 | 159 |
| 1.3125-12 | AS64359 | 5.6 | 20 | 50 | 177 |
| 1.6250-12 | AS64360 | 7.1 | 25 | 63 | 221 |

d) Assemble – Ensure the nipple and nut are in-line with the union without undue straining. Start the nut on the union and finger tighten.

e) Torque Tighten – Torque tighten the nut to the applicable value of Table 12 in accordance with Section 8 while holding the union from turning. For nut with a separate fitted thrust wire a “bedding-in” procedure is necessary to ensure a good seal. For torque tightening values of union nuts using an extension see Appendix D.

f) The bedding-in procedure for torque tightening a nut with separate thrust wire fitted is as follows: Loosen the nut from the appropriate torque value approximately one half turn. Then retighten to the torque value and loosen a further two times Finally, the nut is re-tightened to the torque value without pausing before reaching the appropriate torque value listed in Table 12.

Rolls-Royce Plc 30-Nov-16 15:23:08 213424 Mathias Schuler



© Rolls-Royce Plc 2001



This document is the property of Rolls-Royce plc and may not be copied or communicated to a third party or used for any purpose other than for which it is supplied without express written authority of Rolls-Royce plc

This is an uncontrolled copy and will not be kept up to date



TABLE 12 – ASSEMBLY TORQUE REQUIREMENTS FOR UNION NUTS

| Free Running Union Nuts | | | | | |
|---|---|---|---|---|---|
| Nominal Inch Thread Size | Part Numbers | | Assembly Torque | | |
| | | | Nm | lbf.in | lbf-ft |
| .4375-20 | AS15700 | AS63750 | 16.4 | 145 | - |
| .5000-20 | AS15701 | AS63751 | 19.2 | 170 | - |
| .6250-18 | AS15702 | AS63752 | 24.3 | 215 | - |
| .6875-16 | AS15703 | AS63753 | 27.1 | 240 | - |
| .7500-16 | AS15704 | AS63754 | 29.9 | 265 | - |
| .8125-16 | AS15705 | AS63755 | 33.3 | 295 | - |
| .8750-14 | AS15706 | AS63756 | 36.7 | 325 | - |
| 1.0625-12 | AS15707 | AS63757 | 47.5 | 420 | - |
| 1.1875-12 | AS15708 | AS63758 | 56.5 | 500 | - |
| 1.3125-12 | AS15709 | AS63759 | 66.7 | 590 | - |
| 1.6250-12 | AS15710 | AS63760 | 99 | - | 73 |
| 1.8750-12 | AS15711 | AS63761 | 134 | - | 99 |

| Self-Locking Union Nuts | | | | | |
|---|---|---|---|---|---|
| Nominal Inch Thread Size | Part Numbers | | Assembly Torque | | |
| | | | Nm | lbf.in | lbf-ft |
| .4375-20 | - | AS64350 | 22 | 195 | - |
| .5000-20 | - | AS64351 | 25.3 | 224 | - |
| .6250-18 | - | AS64352 | 32 | 283 | - |
| .6875-16 | - | AS64353 | 36 | 319 | - |
| .7500-16 | - | AS64354 | 40 | 354 | - |
| .8125-16 | - | AS64355 | 42.9 | 380 | - |
| .8750-14 | - | AS64356 | 48 | 425 | - |
| 1.0625-12 | - | AS64357 | 61 | 540 | - |
| 1.1875-12 | - | AS64358 | 71 | - | 52 |
| 1.3125-12 | - | AS64359 | 84 | - | 62 |
| 1.6250-12 | - | AS64360 | 121 | - | 89 |

Rolls Royce Plc
30-Nov-16
15:35:08
213424
Matthias Schuler



© Rolls-Royce Plc 2001



This document is the property of Rolls-Royce plc and may not be copied or communicated to a third party or used for any purpose other than for which it is supplied without express written authority of Rolls-Royce plc

This is an uncontrolled copy and will not be kept up to date



6.11 Electrical Connector Jam Nut Mounting:

6.11.1 Application:

This Section deals with the bulkhead mounting of electrical connector receptacles, See Figure 27. For specific application see below:

- Connector receptacle, per MIL-DTL-38999 Series III, jam nut mounting
- Connector receptacle, per MIL-DTL-38999 Series IV (Metric), jam nut mounting
- Connector receptacle, per ESC004 (AS50151 Class K), jam nut mounting
- Connector receptacle, per ESC10 (MIL-DTL-83723 Series III), jam nut mounting
- Connector receptacle, per ESC11, jam nut mounting
- Connector receptacle, per ESC15 (ESC10, MIL-DTL-83723 Series III), jam nut mounting
- Connector receptacle, per ESC16 (ESC11), jam nut mounting

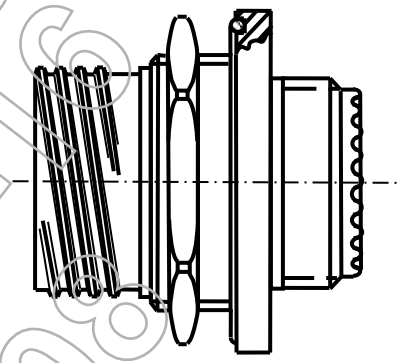

FIGURE 27 – CONNECTOR RECEPTACLE, JAM NUT MOUNTING

6.11.2 Procedure:

a) Examine - Check the connector part numbers and harness assembly to ensure selection of the correct parts. Examine the connector receptacle, external mounting threads, sealing O-ring (if applicable), jam nut thread condition for cleanliness and freedom from damage, foreign matter, corrosion, protective films or temporary protective coatings.

b) No Lubrication – Due to the potential contamination of electrical/electronic components, no lubricant shall be applied to threads and bearing surfaces of electrical hardware.

c) Assemble - Install the connector into the hole in the bulkhead. Ensure there is no strain of attached wiring. With the connector held in the desired position, assemble the jam nut to the connector and finger tighten.

d) Torque Tighten – With the connector held in the desired position, torque tighten the jam nut to the value specified in Table 13 for MIL-DTL-38999 or Table 14 for ESC connectors in accordance with Section 8.

Rolls Royce Plc 30-Nov-16 15:35:08 21342 Matthias Schuller



© Rolls-Royce Plc 2001



This document is the property of Rolls-Royce plc and may not be copied or communicated to a third party or used for any purpose other than for which it is supplied without express written authority of Rolls-Royce plc

This is an uncontrolled copy and will not be kept up to date



TABLE 13 – TORQUE REQUIREMENTS OF JAM NUT FOR MOUNTING OF MIL-DTL-38999 SERIES III AND SERIES IV CONNECTOR RECEPTACLES

| Jam Nut Nominal Metric Thread Size | Jam Nut D38999/28 Dash No. (Ref.) | Connector | | Assembly Torque | |
|---|---|---|---|---|---|
| | | Series III Shell Size | Series IV Shell Size | Nm | lbf.in |
| 17 | 1 | 9 | - | 3.3 | 29 |
| 20 | 2 | 11 | - | 4.4 | 39 |
| 25 | 3 | 13 | 11 | 6.3 | 56 |
| 28 | 4 | 15 | 13 | 7.5 | 66 |
| 31 | 5 | - | 15 | 8.5 | 75 |
| 32 | 6 | 17 | - | 8.9 | 79 |
| 34 | 7 | - | 17 | 9.6 | 85 |
| 35 | 8 | 19 | - | 10.1 | 89 |
| 38 | 9 | 21 | 19 | 11.2 | 99 |
| 41 | 10 | 23 | 21 | 12.3 | 109 |
| 44 | 11 | 25 | 23 | 13.3 | 118 |
| 47 | 12 | - | 25 | 14.5 | 128 |

Rolls Royce Plc 30-Nov-16 15:35:08 213424 Mathias Schuler



© Rolls-Royce Plc 2001



This document is the property of Rolls-Royce plc and may not be copied or communicated to a third party or used for any purpose other than for which it is supplied without express written authority of Rolls-Royce plc

This is an uncontrolled copy and will not be kept up to date



TABLE 14 – TORQUE REQUIREMENTS OF JAM NUT FOR MOUNTING OF ESC CONNECTOR RECEPTACLE

| Jam Nut Nominal Inch Thread Size | Jam Nut MS3186 Dash No (Ref.) | Connector | | | Assembly Torque | |
|---|---|---|---|---|---|---|
| | | ESC15 ESC10* Shell Size | ESC16 ESC11 Shell Size | ESC004** Shell Size | Nm | lbf.in |
| .5625 | 102 | - | - | - | 2 | 18 |
| .6250 | 103 | - | - | 10S | 2.7 | 24 |
| .6250 | 105 | 8 | 8 | - | 2.7 | 24 |
| .6875 | 106 | - | - | - | 3.4 | 30 |
| .7500 | 107 | 10 | 10 | 12S | 4.1 | 36 |
| .8750 | 109 | - | - | 14S | 5.3 | 47 |
| .9375 | 110 | 12 | 12 | - | 6 | 53 |
| 1.000 | 111 | 14 | 14 | 16S | 6.7 | 59 |
| 1.125 | 112 | 16 | - | - | 7.9 | 70 |
| 1.125 | 113 | 16 | 16 | 18 | 7.9 | 70 |
| 1.250 | 116 | 18 | 18 | 20 | 9.3 | 82 |
| 1.375 | 117 | 20 | 20 | 22 | 10.6 | 94 |
| 1.500 | 120 | 22 | 22 | 24 | 11.9 | 105 |
| 1.625 | 121 | 24 | 24 | - | 13.2 | 117 |
| 1.750 | 122 | - | - | 28 | 14.6 | 129 |
| 1.875 | 123 | - | 28 | - | 15.8 | 140 |
| 2.000 | 125 | - | - | 32 | 17.2 | 152 |
| 2.250 | 127 | - | - | 36 | 19.8 | 175 |
| 2.500 | 128 | - | - | 40 | 22.4 | 198 |
| 2.750 | 129 | - | - | 44 | 25.1 | 222 |
| 3.000 | 130 | - | - | 48 | 27.7 | 245 |

*ESC10 is generally to MIL-DTL-83723 Series III
**ESC004 is generally to AS50151 Class K

Rolls-Royce Plc 30-Nov-16 15:35:08 213424 Mathias Schuller



© Rolls-Royce Plc 2001



This document is the property of Rolls-Royce plc and may not be copied or communicated to a third party or used for any purpose other than for which it is supplied without express written authority of Rolls-Royce plc

This is an uncontrolled copy and will not be kept up to date



7 APPROVED TORQUE TOOLING:

7.1 Torque Tool Types:

7.1.1 All torque tools approved for use shall have a calibrated accuracy within ± 5% of the indicated value and are a part of a Measurement Management System per ISO 10012:2003. The following are types of torque tooling that are capable of this accuracy requirement.

7.2 Hand Tools (Listed in the order of preference).

7.2.1 Electronic Torque Wrench:

7.2.1.1 The hand operated electronic torque wrench with a digital readout is preferred and approved for use in all applications. Electronic torque wrenches can measure with a higher degree of accuracy than regular torque wrenches.

FIGURE 28 – ELECTRONIC TORQUE WRENCH EXAMPLE

7.2.2 Dial Torque Wrench:

7.2.2.1 The direct read dial type of wrench is approved for use in all applications.

FIGURE 29 – DIAL TORQUE WRENCH EXAMPLE

7.2.3 Ratcheting or Fixed Head Click or Break Type Wrenches with Adjustable Torque:

7.2.3.1 These wrenches are subject to the usual Rolls-Royce calibration requirements for torque wrenches with additional check with a Torqemaster-style gauge.

**Important note:** Care must be taken to remove the tightening force immediately after the click of the wrench is felt and/or heard as these types of wrenches will then become a solid bar and over-tightening could occur.

Rolls Royce Plc 30-Nov-16 15:35:08 213424 Mathias Schuler



© Rolls-Royce Plc 2001



This document is the property of Rolls-Royce plc and may not be copied or communicated to a third party or used for any purpose other than for which it is supplied without express written authority of Rolls-Royce plc

This is an uncontrolled copy and will not be kept up to date

FIGURE 30 – RATCHETING HEAD CLICK OR BREAK TYPE TORQUE WRENCH EXAMPLE

7.2.4 Fixed Head Click or Break Type with Preset Torque:

7.2.4.1 This type of wrench is approved for limited use only where there are access and/or viewing problems. They are permitted for use on high integrity and main rotor components e.g, disc to shaft joints, under the following conditions:

a) Use only wrenches set to a single torque value by the calibration department.
b) The wrench contains a tamper proof label stating the set torque value.
c) The torque wrench shall carry a further label stating that it is not to be used on main rotor components without a tamperproof label stating the set torque value.
d) Wrenches with damaged labels, incorrect settings or torque readings shall be returned to the calibration department.
e) Before use, the set torque shall be checked with a Torquemaster-style gauge.
f) Any change to the torque setting shall require the application of a new label.

**Important note**: Care must be taken to remove the tightening force immediately after the click of the wrench is felt and/or heard as these types of wrenches will then become a solid bar and over-tightening could occur.

FIGURE 31 – FIXED HEAD CLICK OR BREAK TYPE TORQUE WRENCH EXAMPLE

7.2.5 Visible Micrometer Adjustable Setting Models:

7.2.5.1 This type of wrench is not approved for use on high integrity and main rotor components, e.g, disc to shaft joints. They may be used on other areas only if checked by the user at the required torque setting on a "Torquemaster" - style gauge prior to being used (at least once a day) and if they have an accuracy within +/- 5%. Note – when not in use this type of wrench shall be prepared for storage. See Section 7.3.3.

Rolls Royce Plc 30-Nov-15 15:39:03 1213424 Mathias Schuler



© Rolls-Royce Plc 2001
This document is the property of Rolls-Royce plc and may not be copied or communicated to a third party or used for any purpose other than for which it is supplied without express written authority of Rolls-Royce plc

This is an uncontrolled copy and will not be kept up to date



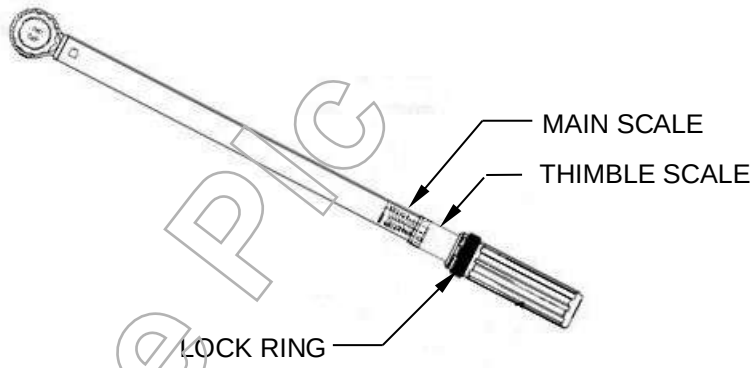


FIGURE 32 – VISIBLE MICROMETER ADJUSTABLE SETTING TORQUE WRENCH EXAMPLE

7.2.6 Torque Limiting Screwdrivers:

7.2.6.1 Torque limiting screwdrivers are preferred and approved for use on external threaded fasteners up to .250 inch or 6 mm nominal diameter.

FIGURE 33 – TORQUE LIMTING SCREWDRIVER EXAMPLE

7.2.7 Deflecting Beam:

7.2.7.1 The deflecting beam wrench with or without a pivoting handle SHALL NOT BE USED IN ANY CIRCUMSTANCES. They are prone to inaccuracies caused by hand position, reading position and operator's judgement.

FIGURE 34 – DEFLECTING BEAM TORQUE WRENCH EXAMPLE

Rolls Royce Plc 30-Nov-16 15:35:08 213424 Mathias Schuller



© Rolls-Royce Plc 2001



This document is the property of Rolls-Royce plc and may not be copied or communicated to a third party or used for any purpose other than for which it is supplied without express written authority of Rolls-Royce plc

This is an uncontrolled copy and will not be kept up to date



7.3 Power Torque Tools:

7.3.1 Power torque tools can either be wrench type or screwdriver type. Power torque tools are conditionally approved for use as follows:

7.3.1.1 All power torque tools approved for final torque tightening shall have a demonstrated calibrated accuracy of ± 5% of the indicated torque. Appendix A contains a sample list of tools that have been assessed and approved by Rolls-Royce plc Design Standards and Production Engineering.

7.3.1.2 Power torque tools with accuracy of at least ±10% of the required setting may be used to aid faster assembly but not for applying the final tightening torques. These tools shall be set to approximately 50% of the final tightening torque value. The full final torque being applied with an approved torque tool having the ±5% calibration accuracy.

7.3.1.3 **Important Note:** Power tools introduce speed which can result in excessive heat generated when the fastener engages a self-locking feature. This heat can compromise the resulting load achieved by the fastener and/or damage the fastener, especially self-locking wire thread inserts. Therefore p**ower tools should be limited to a maximum of 100 rpm**. The following exceptions and requirements apply:

- If this 100 rpm limit cannot be verified or complied with, then a written procedure shall be developed which demonstrates that the torque tightening operation results in no damage to the fasteners, the self-locking threads or surrounding materials. This procedure requires Rolls-Royce Assembly Engineering approval for use on production hardware.

- If rpm restrictions below 100 RPM on power tools are required, those limits shall be specified on the applicable assembly build instruction.

7.3.2 Inspection of power tools shall be maintained to ensure the following standards:

a) The air powered tools shall be capable of giving a constant load on an airline pressure that may fluctuate from 480 to 690 kPa (70 to 100 lbf/in$^2$).

b) DC Power tools shall be calibrated in the manner in which they are to be used.

c) Air powered tools shall be identified by affixing a label endorsed 'This wrench set to ..... Nm (.....lbf.in)'.

d) The power tool setting shall not be altered without the sanction of the Inspection/Calibration Department concerned.

e) Power tools shall be checked when they are drawn from the Stores and at regular intervals at the discretion of the Quality department concerned.

f) Power tools used with universal joints are not recommended but permitted[(1)] up to an angle of 25°[(1)] from the fastener axis for certain operations. However, extreme caution shall be observed and angles shall be measured. 30°[(2)] shall be taken as the maximum usage angle if the universal joint are of a type that restricts movement to 30°. Suitable universal joints are covered by Rolls-Royce Standard Part Drawings KU12800A.

[(1)] Assessments carried out show that it is possible to use a universal joint to torque tighten bolts up to 25° without incurring significant penalties. Note: Only tools designated for this purpose shall be used. It is required that a record of universal joint usage is noted in the build operations history.

Rolls Royce Plc
30-Nov-16
15:33:08
2183424
Matthias Schuller



© Rolls-Royce Plc 2001



This document is the property of Rolls-Royce plc and may not be copied or communicated to a third party or used for any purpose other than for which it is supplied without express written authority of Rolls-Royce plc

This is an uncontrolled copy and will not be kept up to date



(2) During the testing of the power tooling and universal joints it was observed that at 30° and above, universal joints become increasingly less accurate and are difficult to operate.

7.4 Torque Tool Selection:

7.4.1 Torque wrenches shall be selected only from the approved types based upon the application and consideration of the following:

a) Read Access – Dial and electronic readout require access above the wrench to read the torque values.
b) Accuracy – Wrench accuracy can be dependent on users experience and judgement. Direct read electronic, click type and torque limiting tools minimize the users' variability which will result in more consistent torque between fasteners.
c) Fastener size – Torque limiting screwdrivers are preferred over torque wrenches for fasteners with nominal diameters of .250 inch (6 mm) or less.
d) Direction – If the torque wrench is required to measure the breakaway or unseating torque it must be selected from those specifically calibrated and designed for the loosening direction.
e) Numbers of fasteners – Power torque tools are to be considered for use on production assemblies that contain multiple fasteners of same nominal diameter where assembly speed and accuracy is a factor.

7.4.2 Accuracy:

7.4.2.1 The torque wrench used for final torque tightening shall have a calibrated accuracy within ± 5% of the indicated value.

7.4.2.2 To maintain accuracy during the final torque tightening using a power tool, the RPM must be kept below the 100 rpm limit (Ref. Paragraph 7.3.1.3). Additionally, accuracy is maintained when fasteners assembled with power tools are allowed to cool prior to applying the final tightening torque.

7.4.3 Range:

7.4.3.1 A torque wrench shall be calibrated and selected such that the assembly torque value is within the upper 80% of the wrench's torque range. Most wrench manufacturers state that the lower 20% of the wrench's torque range has reduced measurement accuracy. However, any torque wrench that utilizes automated electronic monitoring and recording of the actual torque data is permitted to use 100% of the wrench manufacturer's recommended torque range provided that the ±5% calibration accuracy is maintained.

7.4.4 Units:

7.4.4.1 Torque tools can be either metric or Imperial English based. Table 15 gives the conversion factors for torque units of measurement:

Rolls-Royce Plc 30-Nov-16 15:22:06 21342 Mathias Schuler



© Rolls-Royce Plc 2001

This document is the property of Rolls-Royce plc and may not be copied or communicated to a third party or used for any purpose other than for which it is supplied without express written authority of Rolls-Royce plc

This is an uncontrolled copy and will not be kept up to date



TABLE 15 – TORQUE CONVERSION FACTORS

| To Convert From | Multiply By | To Obtain |
|---|---|---|
| oz.in | 0.062500 | lbf.in |
| lbf.in | 16.000000 | oz.in |
| lbf.in | 0.083333 | lbf.ft |
| lb.ft | 12.000000 | lbf.in |
| ozf.in | 7.061550 | mNm |
| lbf.in | 0.112985 | Nm |
| lb.ft | 1.355820 | Nm |
| mNm | 0.141612 | ozf.in |
| Nm | 8.850750 | lbf.in |
| Nm | 0.737561 | lbf.ft |

7.4.5 Condition:

7.4.5.1 Inspection of torque wrenches is the responsibility of the local Quality and Inspection departments who shall ensure the following standards are met:

a) Torque wrenches shall be checked at regular intervals. The actual period between checks depends on the amount of use of the tool concerned and shall be left to the discretion of the Quality department concerned. Suitable records shall be kept to indicate when wrenches were last checked.

b) Torque wrenches shall be checked as follows when issued from Stores:

- The pointer shall be approximately in line along the length of the wrench pointing towards the square drive.
- No broken dial glass or twisted square drives.
- All calibration labels shall be valid and legible, and any tamperproof labels applied shall be intact.

7.5 Care and Handling:

7.5.1 Improper use:

7.5.1.1 Torque wrenches shall not normally be used for loosening (often referred to as "unseating torque" measurement), as this can result in them being damaged. Tests have shown that on a flange without engine running, torques could be up to 30% less than the tightening torque, and after engine running can be up to six times the tightening torque. Unseating torque measurement is therefore considered to be only a qualitative method of

Rolls Royce Plc 30-Nov-16 15:35:08 218424 Matthias Schuller



© Rolls-Royce Plc 2001



This document is the property of Rolls-Royce plc and may not be copied or communicated to a third party or used for any purpose other than for which it is supplied without express written authority of Rolls-Royce plc

This is an uncontrolled copy and will not be kept up to date



assessing joint condition. For more information of the methods of assessing joint condition see Section 9.

7.5.2 Handling:

7.5.2.1 Torque tools shall be handled with care and shall not be dropped, handled rough or exposed to impacts. If any of these conditions occur, the condition and calibration of the wrench shall be checked before use.

7.5.3 Preparation for storage:

7.5.3.1 For long term storage, torque tools shall be protected from damage and must be inspected and re-calibrated (as required) for use.

7.5.3.2 For click or break type tools, the force acting on the spring should be relieved to maintain the spring's strength. Some manufacturers caution that torque tools of this type require a small amount of tension to prevent dislocation and damage to the internal mechanism. Therefore, for long term storage, it is recommended that click or break type tools be set to approximately 20% of full scale.

7.6 Torque Wrench Accessories and Drives:

7.6.1 The following are general requirements for suitable torque tightening tools and accessories such as wrench drives, sockets, adapters, extensions and joints.

a) Adequate strength to meet the torque loads required to be transmitted.

b) Clean and uniform finish.

c) Sockets for tightening lightweight self locking nuts and bolts shall have a twelve-point profile such that the wrenching features are not damaged. The recommended profile is “Flank Drive”.

d) Must not contain any low melting point coating or material that could cause contamination to other parts or fasteners (i.e. cadmium)

e) Sockets or drives in direct contact with cadmium plated parts or fasteners shall be noted and shall not be used on non-cadmium parts and fasteners. Cadmium contamination on to high temperature surfaces can result in a risk of serious failure.

Rolls-Royce Plc
30-Nov-16
15:35:00
213424
Mathias Schuler



© Rolls-Royce Plc 2001
This document is the property of Rolls-Royce plc and may not be copied or communicated to a third party or used for any purpose other than for which it is supplied without express written authority of Rolls-Royce plc

This is an uncontrolled copy and will not be kept up to date



8 FASTENER TIGHTENING REQUIREMENTS:

8.1 Torque Measurement:

8.1.1 Measuring assembly torque shall be accomplished while the fastener is turning. A measurement initiated from a stationary fastener can be much higher than the target assembly torque due to the introduction of static friction. Therefore, to ensure measurements are dynamic, the torque tool should rotate a minimum of 30º after engagement before the assembly torque is achieved.

8.2 Torque Tolerance:

8.2.1 The assembly torque values shown in the applicable tables of this specification or on the drawing were mathematically derived to provide the ideal clamping force on the parts being joined. Torques applied that are within ± 5% of the value are acceptable. The operator should apply torque as close as possible to the torque value specified. The torquing of threaded fasteners is not exact; therefore repeatable processes must be employed to limit variance.

8.3 Torque Wrench Use:

8.3.1 The use of a calibrated torque wrench or torque screwdriver is mandatory to achieve the target assembly torques specified, except when the conditions in the following paragraphs (8.3.1.1. and 8.3.1.2) are applicable or when agreement to the contrary is covered by formal instructions recorded on the Torque Schedule or Component Definition. Applications to change formal instructions shall be via Drawing Alteration Request to the Component Definition Group.

8.3.1.1 For thread sizes .1380 to .2500, it may be found useful to use a torque limiting screwdriver (See 7.2.6).

8.3.1.2 Where the fasteners have thread sizes smaller than .1380, it is not necessary to use a torque wrench (unless otherwise specified on the Component Definition or Torque Schedule). For these applications the fitter must employ his own skill and judgement to determine that the nuts/bolts are adequately tightened without being overstressed.

8.3.2 Torque Readings:

8.3.2.1 The torque reading shown on the scale of a torque wrench (without extension) is the product of the length of the wrench lever (dimension “A” in Figure 35) and the force applied to the handle.

Rolls-Royce plc 30-Nov-16 15:35:08 213424 Mathias Schuller



© Rolls-Royce Plc 2001



This document is the property of Rolls-Royce plc and may not be copied or communicated to a third party or used for any purpose other than for which it is supplied without express written authority of Rolls-Royce plc

This is an uncontrolled copy and will not be kept up to date



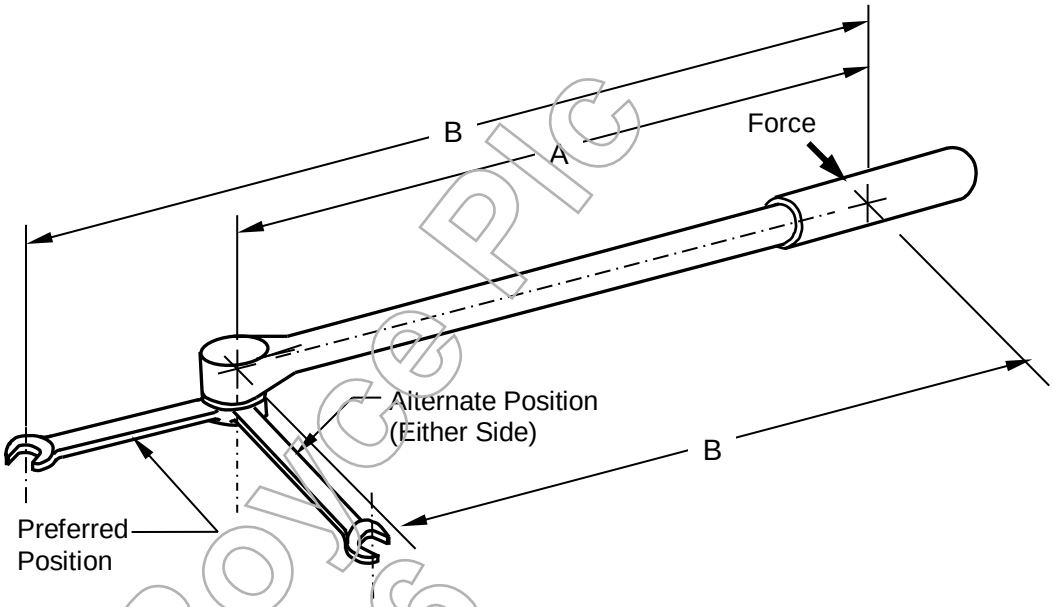


FIGURE 35 – TORQUE WRENCH USE AND EXTENSIONS

8.3.3 Extensions/adapter:

8.3.3.1 When extensions (or adapters) are used on the torque wrench, the scale reading must be modified according to the following formula:

$$\text{Scale reading} = \frac{\text{Required torque value x length of lever (A)}}{\text{Total lever length (B)*}}$$

*Note that the length B varies depending on extension position and should be measured parallel to the torque wrench lever as shown on Figure 35.

e.g. A nut of .250 inch thread diameter is to be tightened to 15.2 Nm using a torque wrench 250 mm long and with an extension of 76 mm, fitted in the preferred position, giving a total lever length of 326 mm.

The indicated scale reading must be: (15.2 x 250) / 326 = 11.7 Nm

Note: The lengths A and B may result in any units, Imperial or Metric, so long as both are in the same units.

8.3.3.2 Where the extension has to be fitted at the alternative position (e.g., due to limited access) the shortest possible extension shall be used and care shall be taken to apply the load to the wrench handle at right angles to the length of the wrench, in order to avoid errors arising.

Rolls Royce Plc 30-Nov-16 15:23:08 213424 Matthias Schuller



© Rolls-Royce Plc 2001



This document is the property of Rolls-Royce plc and may not be copied or communicated to a third party or used for any purpose other than for which it is supplied without express written authority of Rolls-Royce plc

This is an uncontrolled copy and will not be kept up to date



8.3.4 Universal Joints:

8.3.4.1 Universal joints shall not be used when measuring torque. They produce serious torque reading inaccuracies which may lead to over or under tightening. An exception to this is when universal joints form part of the tooling specifically instructed for a torque tightening operation. In situations where universal joints have been approved, it is required that a record of universal joint usage is noted in the build operations history.

8.3.5 Performance:

8.3.5.1 Torque Application - Torque shall be applied to the nut rather than the bolt whenever possible. Tightening the bolt can result in inadequate bolt tension due to friction between the shank and hole and also cause damage by scoring of the shank or hole. This is especially a concern where close clearance applications such as close tolerance shank bolts used in fitted holes. Due to the tight clearances between the fitted hole and bolt shank, these bolts shall not be turned.

8.3.5.2 Engagement - When retaining the wrench socket or open-end wrench adapter on the nut or bolt, care must be taken to apply only sufficient hand pressure to maintain location of the wrench on the firmly engaged with the nut or bolt.

8.3.5.3 Handle Position - The handle of the torque wrench should be kept perpendicular to the axis of the fastener.

8.3.5.4 Hand Position And Pressure – The hand position and pressure should be centred on the grip. Hand pressure should be kept perpendicular to the handle and applied in the same plane as the rotation. If the torque handle has a pivoted grip, the hand position should be cantered about the pivoted joint. Heavy hand pressure on the locating end of the wrench or at extreme angles to the wrench will affect accuracy of the applied torque.

8.4 Tightening Sequence and Stages:

8.4.1 When multiple fasteners are used to secure a part, it is critical that each fastener exerts an equal axial load. To ensure this axial loading, fasteners shall be tightened in specific sequences and/or stages.

8.4.2 Covers Secured With 3 Bolts or Less:

8.4.2.1 Covers with 3 bolts or less shall be tightened as follows:

a) Fasteners shall be tightened in a clockwise sequence to 1/2 the assembly torque.

b) Then apply the full assembly torque in the same sequence.

c) Recheck the torque of all threaded fasteners in a clockwise sequence to assure: 1) that the specified assembly torque is maintained, and 2) that a fastener position has not been missed.

d) Continue to torque in a clockwise sequence until the proper assembly torque is maintained.

8.4.3 Covers secured with 4 bolts:

8.4.3.1 Covers that have 4 bolts shall be tightened as follows:

a) Fasteners shall be torqued in cross pattern to 1/2 the assembly torque.

b) Then apply the full assembly torque in the same sequence.

Rolls Royce Plc 30-Nov-16 15:35:08 216424 Matthias Schuller



© Rolls-Royce Plc 2001



This document is the property of Rolls-Royce plc and may not be copied or communicated to a third party or used for any purpose other than for which it is supplied without express written authority of Rolls-Royce plc

This is an uncontrolled copy and will not be kept up to date



c) Recheck the torque of all threaded fasteners in a clockwise sequence to assure: 1) that the specified assembly torque is maintained, and 2) that a fastener position has not been missed.

d) Continue to torque in a clockwise sequence until the proper assembly torque is maintained.

8.4.4 Round covers:

8.4.4.1 Covers that are basically circular in shape and have more than 4 bolts shall be torqued as described for circular or irregular shaped flange Section 8.4.6.

8.4.5 Oblong covers:

8.4.5.1 Covers that are oblong in shape and have more than 4 bolts shall be torqued as described in Split Casing in Section 8.4.9. However, refer to Figure 36 below.

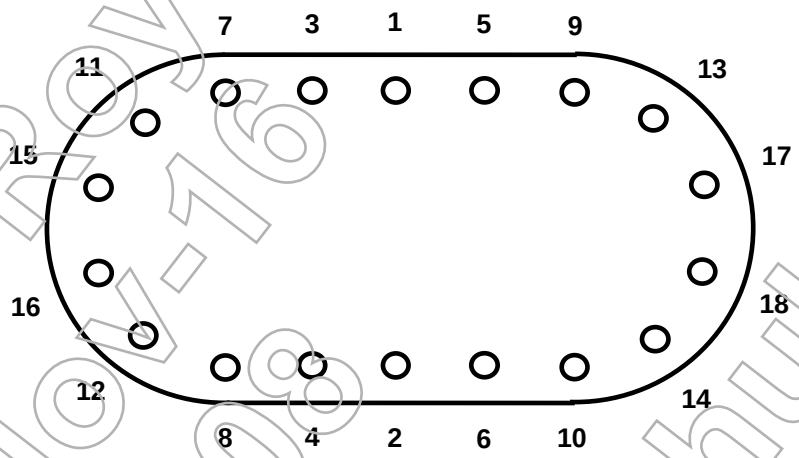


FIGURE 36 – TORQUE SEQUENCE FOR OBLONG COVERS

8.4.6 Circular or Irregular Shaped Flanges:

8.4.6.1 Circular or irregular shaped flanges with continuous split lines shall be tightened as follows: Refer to Figure 37.

a) Tighten a pair of threaded fasteners that are approximately 180° apart to 1/2 of specified assembly torque,

b) Move to another pair approximately 90° from the first pair and tighten to 1/2 of specified assembly torque.

c) Bisect the resulting angles and repeat as before until all threaded fasteners have been tightened to 1/2 of the specified assembly torque.

d) When all fasteners have been tightened to 1/2 of the specified assembly torque, apply the specified assembly torque in a similar sequence (see Figure 37) to all fasteners on the split line.

e) Then recheck the torque of all threaded fasteners in a clockwise sequence to assure: 1) that the specified assembly torque is maintained, and 2) that a fastener position has not been missed.

Rolls Royce Plc 30-Nov-16 15:33:08 215424 Matthias Schuller



© Rolls-Royce Plc 2001



This document is the property of Rolls-Royce plc and may not be copied or communicated to a third party or used for any purpose other than for which it is supplied without express written authority of Rolls-Royce plc

This is an uncontrolled copy and will not be kept up to date



f) Continue to torque in a clockwise sequence until the proper assembly torque is maintained.

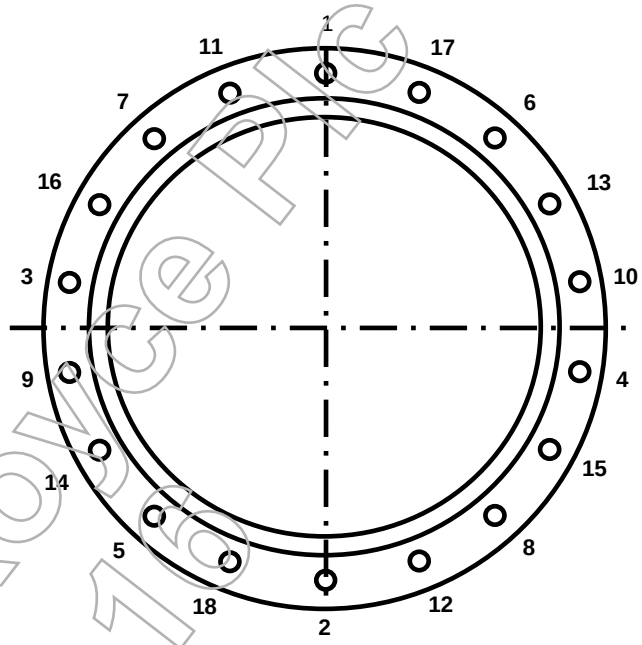


FIGURE 37 – TORQUE SEQUENCE FOR CIRCULAR OR IRREGULAR SHAPED FLANGES

8.4.7 Flanges with Sealing Compound or Gaskets (Including Metal Gaskets):

8.4.7.1 Fasteners used to secure flanges of any type (pipe, case, etc.) containing sealing compounds, O-ring gasket, metal sealing gasket (e.g. metal O-ring, metal c-ring, metal e-ring / w-ring, corrugated metal gasket, etc) shall be tightened as follows:

a) Tighten fasteners in a clockwise sequence to 1/2 the assembly torque.

b) Then apply the full assembly torque in the same sequence.

c) Then, recheck the torque of all threaded fasteners in a clockwise sequence to assure: 1) that the specified assembly torque is maintained, and 2) that a fastener position has not been missed.

d) Continue to torque in a clockwise sequence until the proper assembly torque is maintained.

8.4.8 Flanges Secured with 50 or More Fasteners:

8.4.8.1 For flanges of any type (pipe, case, etc.) that are secured with 50 or more fasteners it is not practical to apply a standard tightening sequence of individual fasteners. Therefore, it is permissible to tighten groups of adjacent fasteners to simplify and speed up the assembly process. For such flanges, the torque sequence of Section 8.4.6 and Figure 37 apply except an individual fastener or sequence number will represent a fastener group. The maximum number of fasteners in a group shall be per Table 16. Each group of fasteners shall contain an equal number of fasteners within one.

Rolls Royce Plc 30-Nov-16 15:55:08 GMT 3424 Matthias Schuller



© Rolls-Royce Plc 2001



This document is the property of Rolls-Royce plc and may not be copied or communicated to a third party or used for any purpose other than for which it is supplied without express written authority of Rolls-Royce plc

This is an uncontrolled copy and will not be kept up to date



TABLE 16 – MAXIMUM NUMBER OF FASTENERS IN GROUP

| Total Number of Fasteners | Maximum Number of Fasteners in a Group |
|---|---|
| 50 to 99 | 4 |
| 100 to 149 | 6 |
| 150 to 199 | 8 |
| 200 to 249 | 10 |
| 250 or more | 12 |

8.4.9 Split Casings:

8.4.9.1 Fasteners used to secure casing split line casings shall be tightened as follows: Refer to Figure 38.

a) Tighten a pair of midsection threaded fasteners first (one on each flange).

b) Work outwards from the centre tightening each pair of fasteners to 1/2 of specified assembly torque. Note the torquing sequence shown in Figure 38.

c) Repeat the process, tightening to the specified assembly torque.

d) Recheck the torque of all fasteners from end to end on both flanges to assure: 1) that the specified assembly torque is maintained, and 2) that a fastener position has not been missed.

e) Continue to torque from end to end on both flanges until the proper assembly torque is maintained.

f) If a sealing compound or non-metallic gasket is used between clamped surfaces, the tightened flanges shall be rechecked and tightened until no further relaxation occurs. This is because compounds may exude and non-metallic gaskets may relax slowly under pressure. If this occurs, the bolt load may decrease considerably below the intended design loads.

Rolls Royce Plc
30-Nov-16
15:35:03
213424
Mathias Schuller



© Rolls-Royce Plc 2001



This document is the property of Rolls-Royce plc and may not be copied or communicated to a third party or used for any purpose other than for which it is supplied without express written authority of Rolls-Royce plc

This is an uncontrolled copy and will not be kept up to date



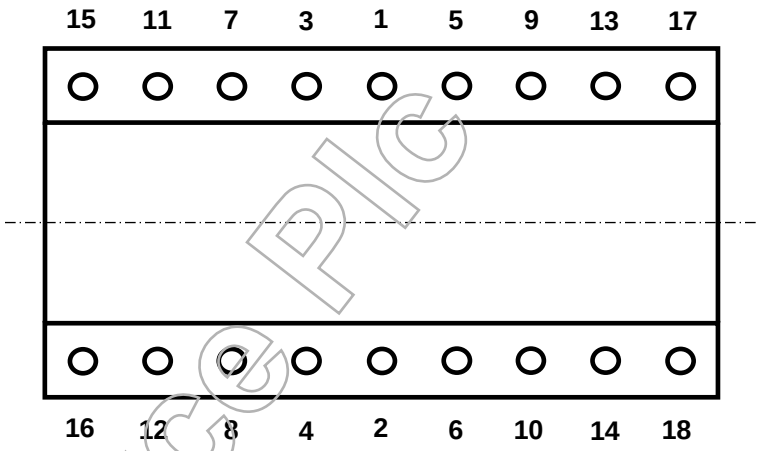


FIGURE 38 – TORQUE SEQUENCE FOR SPLIT CASINGS

8.5 Use of Slave Bolts:

8.5.1 The use of slave bolts should be avoided, if possible. Where they are necessary, they must have threads identical to the correct bolt, must be uncoated and be readily identified as 'slaves'.

9 QUALITY ASSURANCE (JOINT CONDITION):

9.1 Joint Condition Inspection Methods:

9.1.1 The following paragraphs identify methods to assess the joint condition. Each method is subject to inaccuracies and hazards in the confirmation that fasteners have been tightened to the specified torque values. Measurement of the break torque is not a method of assessing the joint condition or the assembly torque and leads to the improper use of the torque tool, see Section 7.3.

9.1.2 Visual Indicator Method:

9.1.2.1 For this method the build instruction will require that a visual torque inspection mark (stripe) is applied to the mating fasteners or fittings immediately after torque tightening. The alignment of the strip provides a visual indication that torque tightening has been performed and is maintained. This method is primarily used for the torque inspection of tube or hose union nuts.

9.1.2.2 The following procedure applies for placing the torque inspection mark: The mating fasteners or fittings shall be locally degreased in the area where the mark is to be applied, and 'Inspection Seal Lacquer' MSRR1102 shall be applied direct from the tube as a straight line bead, axially across the joint. It is preferred that the seal lacquer is applied in a continuous bead, but the design of certain tube fittings may dictate that the seal lacquer has to be applied in two in-line beads. See Figure 39 for examples of acceptable marking. This mark shall be clearly visible for future inspection checks.

Rolls Royce Plc 30-Nov-16 1555.08 214424 Matthias Schuller



© Rolls-Royce Plc 2001

This document is the property of Rolls-Royce plc and may not be copied or communicated to a third party or used for any purpose other than for which it is supplied without express written authority of Rolls-Royce plc

This is an uncontrolled copy and will not be kept up to date



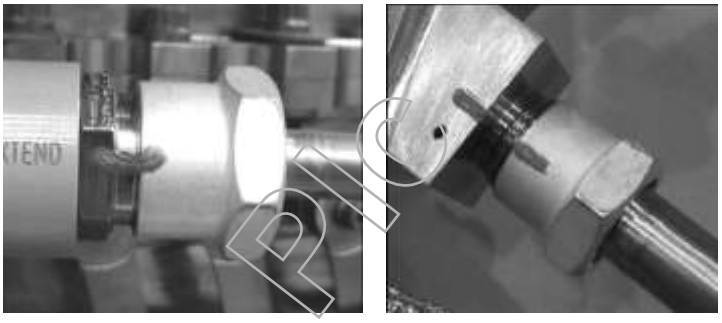

FIGURE 39 – EXAMPLES OF ACCEPTABLE VISUAL TORQUE INSPECTION MARKS

9.1.3 Test Torque Method:

9.1.3.1 For the test torque method, tightening torque is applied to the fastener to the assembly "target" torque value at which no motion shall occur. If motion occurs, relaxation of the joint has occurred and it shall be reported promptly to the Rolls-Royce Quality Organization for proper disposition. This method does not check for over-tightened conditions.

9.1.4 Break/Remake Method:

9.1.4.1 For this method the fastener is loosened and then tightened back to the original torque value. This method is considered to be only qualitative but has been found to be useful by Development Engineering. If this method is instructed, the following procedure shall be followed:

a) Mark the nut/bolt and adjacent flange, using a suitable temporary marking method.

b) Unseat the fastener and back-off one half turn. **Important note:** Do not use the torque wrench to loosen the fastener unless it has been designed and approved to do so.

c) Torque tighten fastener back to original marked position. Record the torque required for operation.

d) If disparity exists repeat the procedure and tighten to the specific torque value.

9.2 Fasteners Designated High Integrity:

9.2.1 For those fasteners designated as "High Integrity" on the appropriate fitting instruction, separate build verification for correct assembly shall be undertaken. As a minimum this shall involve an inspection of the fastening for the following:

a) No missing fasteners
b) No obviously un-torqued fasteners with all fasteners showing appropriate thread protrusions
c) No obvious damage to any fastener

9.2.2 The successful completion of this verification step shall be included in the relevant build/inspection records.

Rolls-Royce Plc
30-Nov-16
15:55:08
2416424
Mathias Schuller



© Rolls-Royce Plc 2001



This document is the property of Rolls-Royce plc and may not be copied or communicated to a third party or used for any purpose other than for which it is supplied without express written authority of Rolls-Royce plc

This is an uncontrolled copy and will not be kept up to date



10 NOTES:

10.1 Revision bars indicate changes from the previous issue of this specification and are located in the left margin.

| ISSUE | CHANGE (ESC) NUMBER | CHANGE SUMMARY (IN DESCENDING ORDER) | DATE |
|---|---|---|---|
| D | ESC500026367231 | - Tables updated to reduce errors with easier to read format<br>- Tables listing NM torque values were reviewed for conversion accuracy and corrected.<br>- ADS documents are now SAE/ITC.<br>- Table 1 – Added maximum prevailing Torque values.<br>- 6.1.2.1 – Added a requirement to replace fastener is the maximum prevailing torque is exceeded.<br>- Sections 6.1.5 and 8.4.7 - clarify that seals include O-rings, gaskets, etc. and flanges include pipe, case, etc.<br>- Para. 6.10.2c – clarified that union nut self-locking features shall be checked for prevailing torques when being reused.<br>- Section 7.2 made clarifications that an electronic torque tool is a manual tool with digital readout and added figures for tool identification.<br>- Para. 7.3.1.3 and 7.4.2.2 - clarified that power tools shall be limited to 100 RPM.<br>- Para. 8.4.8.1 – Clarify that the requirements of this paragraph apply to flanges of any type.<br>- Figure 35 – Updated to eliminate poor graphics and depiction using an unacceptable torque tool.<br>- Appendix A - clarification that sample list or approved tools is not intended to restrict the power torque tools.<br>- Table A1 – added Tensor ETV-ST tool. | 17 May 2016 |
| C | ESC500023599589 | - Section 4 added the definition of "High Integrity Fastener"<br>- Section 5.3 added the requirements for fasteners designated high integrity on component definitions.<br>- Para 6.2.1 assembly of parts - added nuts assembled to Dee or Tee head bolts<br>- Added a new Figure 5 example of a joint using captive (Dee or Tee) headed bolts.<br>- Para 6.2.2a and Table 2 - added that parts to be joined shall be examined before assembly.<br>- Para 6.2.2e added note about tightening nuts on Dee and Tee head bolts.<br>- Para 6.8.2 added Beam Seal fitting Class 1 and 2 assembly torques<br>Table 8 – add Beam Seal fitting class 2 torque values.<br>- Para 7.3.3.1 clarified that torque tools must be inspected and re-calibrated after long term storage. | 21 Apr 2015 |



© Rolls-Royce Plc 2001



This document is the property of Rolls-Royce plc and may not be copied or communicated to a third party or used for any purpose other than for which it is supplied without express written authority of Rolls-Royce plc

Rolls Royce plc 30-Nov-1999 15:35:00 213424 Schuler Manfred

This is an uncontrolled copy and will not be kept up to date



| ISSUE | CHANGE (ESC) NUMBER | CHANGE SUMMARY (IN DESCENDING ORDER) | DATE |
|---|---|---|---|
| | | - Para 7.3.3.2 clarified that reducing tension on click or break torque tools is only required for long term storage.<br>- Section 8.4.8 for flanges secured by 50 or more fasteners - The number of fasteners that can be in a group was increased from 4 to a maximum number per table.<br>- Added Table 16 for maximum number of fasteners that can be grouped.<br>- Section 9 – added quality assurance requirements for high integrity fasteners.<br>- Appendix A – Changed the title to clarify that approved tools are only a sample listing.<br>- RFS 1066, 1080, 1087, 1095 | |
| B | ESC500014761841 | - Table 3 class 1 and 2 torque: removed the torque values for thread sizes .1380-40 and .1640-36 and referred users to use Screw Torque Section 6.5. Changed Section 6.5 to define screws and make the section apply to all screws.<br>- Section 7.1, clarify approved power torque tools.<br>- Section 7.2.3 clarify torque wrench acceptable range of use.<br>- Additional typos and corrections. | 19 Jul 2011 |
| A | ESC500012245902 | Corrected rounding and typo of metric (NM) torque values in Table 3 for .2500-28 Class 2, .3125-24 Class 1, .3750-24 Class 2 and .5625-18 Class 2. | 15 Jan 2010 |
| Initial | | This global specification is needed for the XWB engine program. | 21 Aug 2009 |

Rolls Royce plc
30-Nov-16 15:35:08
213424
Mathias Schuller



© Rolls-Royce Plc 2001
This document is the property of Rolls-Royce plc and may not be copied or communicated to a third party or used for any purpose other than for which it is supplied without express written authority of Rolls-Royce plc

This is an uncontrolled copy and will not be kept up to date



## APPENDIX A – ROLLS-ROYCE APPROVED POWER TORQUE TOOLS - FOR THE APPLICATION OF FINAL TIGHTENING TORQUES

A1 Table A1 is a sample list of Power Torque Tools that were assessed by Rolls-Royce and then approved for the application of final tightening torques.

A1.1 This is a sample list and is not intended to restrict the power torque tools that are used for final tightening torques. Rolls-Royce plc Engineering Standards no longer tests power torque tools and the selection of those listed and other makes and types of power torque tools is the responsibility of Rolls-Royce Manufacturing Engineering.

A1.2 Whilst the tools listed in this table are current at time of issue, derivatives/evolutions of the above tools will be permitted providing the basic structure of the tool is the same as the listed power tool. Contact the manufacturers for evidence if unsure and supply Design Standards with data/tool No./Mark changes to enable Table A1 accuracy to be maintained.

TABLE A1 – SAMPLE LIST OF ROLLS-ROYCE POWER TORQUE TOOLS APPROVED FOR THE APPLICATION OF FINAL TIGHTENING TORQUES.

| Tool Manufacturer | Tool Part Number | Torque Range | Power Source |
|---|---|---|---|
| Atlas Copco | ETB6 | 1 to 6 Nm (9 to 53 lbf.in) | Battery |
| | ETB10 | 3 to 10 Nm (26 to 90 lbf.in) | |
| | BTP12 | 10 to 12 Nm (95 to 105 lbf.in) | |
| | Tensor ETV ST * | 2 to 100 Nm (18 to 885 lbf.in) | |
| | LTV008 R07-6 | 3.5 to 7 Nm (31 to 62 lbf.in) | Pneumatic |
| | LTV18 R15-6 | 6 to 15 Nm (53 to 132 lbf.in) | |
| | LTV28 N22-10 | 11 to 22 Nm (96 to192 lbf.in) | |
| | LTV28 R28-10 | 14 to 28 Nm (120 to 252 lbf.in) | |
| | LTV38 N31-10 | 18 to 31 Nm (156 to 276 lbf.in) | |
| | LTV37 SR005 | 20 to 42 Nm (180 to 372 lbf.in) | |
| | LTV38 N55-10 | 30 to 55 Nm (265 to 486 lbf.in) | |
| | Tensor S7 * | 5 to 200 Nm (45 to 1770 lbf.in) | 240V |
| | Tensor ST * | | |
| | Tensor SL * | | |
| Desoutter | CVI 11 with ERP10L | 3 to 10 Nm (26 to 90 lbf.in) | |
| | CVIS with ERP10L | 3 to 10 Nm (26 to 90 lbf.in) | |
| | CVI 11 with ERP20L | 5 to 20 Nm (45 to 177 lbf.in) | |
| | CVIS with ERP20L | 5 to 20 Nm (45 to 177 lbf.in) | |

* These tools are complex and not appropriate for general use. Areas introducing these tools with no previous experience shall seek manufacturer's recommendations for their appropriate application. Any programming of the tools control systems shall be carried out by the manufacturer or qualified Rolls-Royce personnel.

Rolls Royce Plc
30-Nov-16
1E-85-09
2-85-24
Matthias Schuller



© Rolls-Royce Plc 2001



This document is the property of Rolls-Royce plc and may not be copied or communicated to a third party or used for any purpose other than for which it is supplied without express written authority of Rolls-Royce plc

This is an uncontrolled copy and will not be kept up to date



## APPENDIX B – GAUGING OF SELF-LOCKING THREADS FOR RE-USE

B1 Gauging Of Captive Self-Locking Threads For Overhaul:

B1.1 The Engineering requirement for checking the prevailing (locking) torque of self-locking features at overhaul is met by a torque check at the time of re-assembly of the required bolt (see paragraph 6.1.2.1 of this Specification). However, it is sometimes advantageous to inspect with a gauge before assembly commences in order to avoid the need to dismantle partly built assemblies to remove and replace defective fasteners which are found not to achieve minimum prevailing torques with the bolt.

B1.2 Engines use bolts with differing pitch diameter clearances and when gauges are employed it is necessary to select a gauge appropriate to the size of bolt to be assembled.

B1.3 Table B1 lists the part numbers of the gauges and describes their correct selection. These gauges may be used with any suitably calibrated torque checking device to measure prevailing torques as required in paragraph 6.1.2.1, but the system and tools shown in RRES 90033 for assembly checking of helical coil inserts may be found most convenient. The relevant tool numbers are listed in Table B2.

TABLE B1 - TORQUE CHECK GAUGES

| Nominal Inch Thread Size | Gauges 'A'(1) | Gauges 'B'(2) |
|---|---|---|
| .1900-32 | HU 24461 | HC 21739 |
| .2500-28 | HU 24462 | HC 21740 |
| .3125-24 | HU 24463 | HC 21741 |
| .3750-24 | HU 24464 | HC 21742 |
| .4375-20 | HU 24465 | HC 22844 |
| .5000-20 | HU 24466 | HC 22845 |
| .5625-18 | HU 24467 | HC 22846 |
| .6250-18 | HU 24468 | HC 22680 |

These gauges are identified by a groove machined round the square end and with the shank marked 'for ISO3161 bolts'.

(1) Gauges 'A' are for applications where full size male threads having UNJF form to ISO3161 are to be assembled.

(2) Gauges 'B' are for applications where undersize male threads having UNF form to BS 1580-1 are to be assembled.

TABLE B2 - ASSEMBLY TOOLS FOR HELICAL COIL INSERTS

| Tool Number | Description | Torque Range |
|---|---|---|
| 1702173 | Torque-master Dial Setting Rig | 0 lbf.in to 36 lbf.in |
| 1702174 | Torque-master Dial Setting Rig | 10 lbf.in to 100 lbf.in |
| 1704302 | "Standard" torque Limiting Driver | 0.5 lbf.in to 36 lbf.in |
| 1704303 | "Major" Torque Limiting Driver | 10 lbf.in to 100 lbf.in |
| HC21743 | Adaptor - Gauge to Driver | |



© Rolls-Royce Plc 2001



This document is the property of Rolls-Royce plc and may not be copied or communicated to a third party or used for any purpose other than for which it is supplied without express written authority of Rolls-Royce plc

Rolls Royce Plc 30-Nov-16 15:55:08 01524 Matthias Schuller

This is an uncontrolled copy and will not be kept up to date



B1.4 Table B3 below, gives a guide to the type of fastener threads currently in use on the engines indicated. Only silver coated applications may be gauged with the tools specified in this appendix. Where cadmium coated/dry film lubricated nuts have been used with full size threads to BS 1580-1 form, they shall always be gauged only with the actual bolt to be assembled (as in paragraph 6.1.2.1). If the gauges specified were used in cadmium coated nuts, there is a danger that cadmium or molybdenum disulphide may inadvertently be transferred to high temperature parts and this could result in serious failure.

TABLE B3 - ENGINE TYPES AND THREAD APPLICATIONS

| Thread Type | Torque Check Gauge* | Engine Types | |
|---|---|---|---|
| Full size male threads to AS8879 (ISO3161) with silver coated female threads. | Gauges 'A' | RB211 Types<br>Gnome<br>GEM<br>Viper 600 Series<br>Pegasus<br>Adour 851<br>- and all new inch threaded engines introduced after January 1978 | M45H<br>RB199<br>RB318<br>RB401<br>TF41 |
| Undersize male threads to BS 1580-1 with silver coated female threads. | Gauges 'B' | Olympus 593<br>Spey<br>Conway<br>Tyne<br>Avon<br>Dart<br>RB162 | (See Pararaph B1.4 re. cadmium coated parts) |
| Both full size and undersize male threads are used as alternatives with silver coated female threads. | Gauges 'B' | All Adour engines except Adour 851 | |

*Note: The gauge selected is based on the fact that either undersize or full size bolts can be used on final assembly. Rejection rates may be high with these gauges if full size bolts have been used in the assembly at a previous build. If it is known before-hand which bolt size is to be assembled, the gauge appropriate to that bolt size can be selected.

B1.5 This system of gauging is suitable for all standard captive self-locking features such as anchor nuts, shank nuts, wire thread inserts and thinwall inserts. Refer to RRES 90033 for instructions when assembling new helical coil inserts, and RRES 90021 when assembling new thinwall inserts.

Rolls-Royce Plc
Mathias Schuler
21.04.21 15:05:08



© Rolls-Royce Plc 2001



This document is the property of Rolls-Royce plc and may not be copied or communicated to a third party or used for any purpose other than for which it is supplied without express written authority of Rolls-Royce plc

This is an uncontrolled copy and will not be kept up to date



APPENDIX C - TORQUE TIGHTENING OF FASTENERS CLAMPING CORRUJOINT SEALS

C1 Torque tightening of fasteners clamping corrujoint seals:

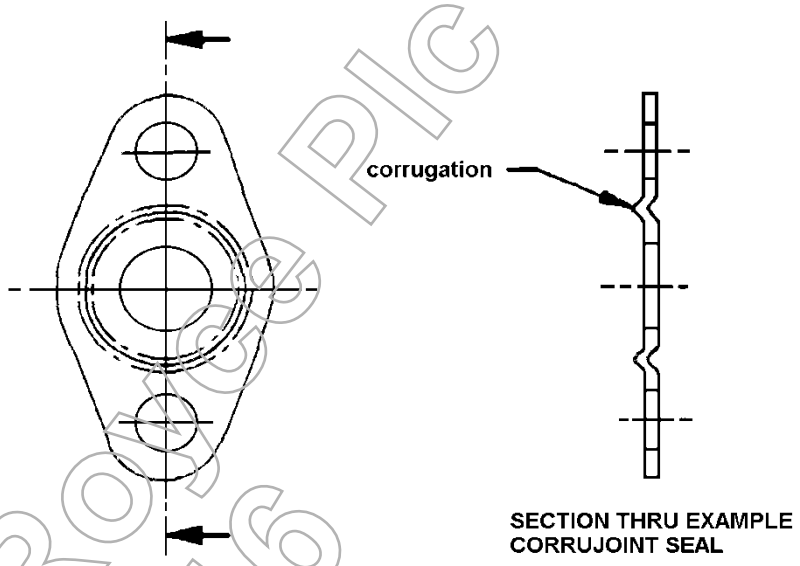


FIGURE C1 – CORRUJOINT SEAL

C1.1 A corrujoint is a non-resilient gasket made from thin sheet metal. It can be produced to fit irregular shaped components with the sealing gasket having a continuous sealing corrugation formed to fit around the profile of the cavity to be sealed.

C1.2 If there are no specific Component Definition assembly instructions regarding the orientation of the corrujoint seal, it shall be installed with the corrugation facing the harder of the two mating faces, if the component hardness can be differentiated by the fitter, i.e., a steel face is likely to be harder than a magnesium alloy face.

C1.3 Where a corrujoint type of seal is used between clamped faces, experience has shown that it is necessary to repeat the torque tightening sequence in order to achieve consistent torque values. This is to allow for compression of the corrujoint during torque tightening.

C1.4 When parts to be tightened are clamping a corrujoint type of seal, the fasteners shall be torque tightened in accordance with the Component Definition or Torque Tightening Schedule instructions. The tightening procedure shall then be repeated, in the same sequence, until the specified torque is maintained on all bolts during one complete pass.

Rolls Royce Plc 30-NOV-16 15:35:08 213424 Mathias Schuller



© Rolls-Royce Plc 2001



This document is the property of Rolls-Royce plc and may not be copied or communicated to a third party or used for any purpose other than for which it is supplied without express written authority of Rolls-Royce plc

This is an uncontrolled copy and will not be kept up to date



APPENDIX D – TORQUE TIGHTENING VALUES USING EXTENSIONS FOR UNION NUTS

TABLE D1 - TORQUE TIGHTENING VALUES FOR UNION NUTS

| Nom. pipe dia. | Nom. thread dia. | Nut part No. | | R-R spanner part No. | Spanner size (open end & crow foot) | Tightening torque | | | | | | | | |
|---|---|---|---|---|---|---|---|---|---|---|---|---|---|---|
| | | | | | | Direct torque | | | Torque with extensions | | | | | |
| | | | | | | | | | 8” wrench | | | 10” wrench | | |
| | | | | | | lbf.in | lbf.ft | Nm | 1” extn. lbf.in | 2” extn. lbf.in | 3” extn. lbf.in | 1” extn. lbf.in | 2” extn. lbf.in | 3” extn. lbf.in |
| .3750 | .3750 | KU10752 | - | - | .5625 (9/16ths) | 125 | - | 14.1 | 112 | 100 | 91 | - | - | - |
| .1875 | .4375 | KU10753 | AS15700 | - | .6250 (5/8ths) | 145 | - | 16.4 | 129 | 116 | 105 | - | - | - |
| .2500 | .5000 | KU10754 | AS15701 | KU12705 | .6875 (11/16ths) | 170 | - | 19.2 | 152 | 136 | 124 | 155 | - | - |
| .3125 | .6250 | KU10755 | AS15702 | - | .8125 (13/16ths) | 215 | 192 | 24.3 | 192 | 172 | 156 | 195 | 179 | 165 |
| .3750 | .6875 | KU10756 | AS15703 UP11893 | - | .8750 (7/8ths) | 240 | - | 27.1 | 214 | 192 | 175 | 218 | 200 | 185 |
| .4375 | .7500 | KU10757 | AS15704 UP11894 | KU12709 | .9375 (15/16ths) | 265 | - | 29.9 | 235 | 212 | 193 | 241 | 221 | 204 |
| .5000 | .8125 | KU10758 | AS15705 | KU37316 | 1.0000 | 295 | - | 33.3 | 262 | 236 | 215 | 268 | 246 | 227 |
| .6250 | .8750 | KU10759 | AS15706 | UT630 | - | 325 | - | 36.7 | - | 260 | 236 | - | 270 | 250 |
| .7500 | 1.0625 | KU10760 | AS15707 | UT818 UT631 | - | 420 | - | 47.5 | - | - | - | - | 350 | 323 |
| .8750 | 1.1875 | KU10761 | AS15708 | UT819 | - | 500 | - | 56.7 | - | - | - | - | 417 | 385 |
| 1.0000 | 1.3125 | KU10762 | AS15709 | UT841 | - | 590 | - | 66.7 | - | - | - | - | 492 | 454 |
| 1.5000 | 1.6250 | KU10763 | AS15710 | UT634 | - | - | 73 | 99 | - | - | - | - | - | - |
| 1.5000 | 1.8750 | KU10764 | AS15711 UP11416 | - | - | - | 99 | 134 | - | - | - | - | - | - |
| 1.7500 | 2.1250 | KU10765 | - | - | - | - | 133 | 180 | - | - | - | - | - | - |
| 2.0000 | 2.3750 | KU10766 | - | - | - | - | 173 | 235 | - | - | - | - | - | - |

Rolls Royce plc 30-Nov-2006 15:35:08 213424 Mathias Schuller



© Rolls-Royce Plc 2001



This document is the property of Rolls-Royce plc and may not be copied or communicated to a third party or used for any purpose other than for which it is supplied without express written authority of Rolls-Royce plc